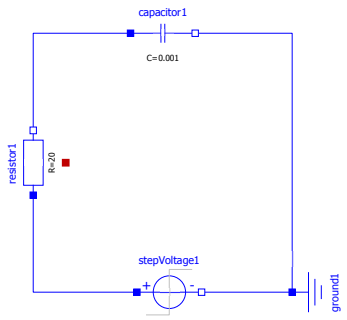
capacitor1
C=0.001
resistor1
R=20
stepVoltage1
+
-
ground1

```
model Circuito_RC_plano
  parameter Real R = 20.0;
  parameter Real C = 0.001;
  parameter Real Vo = 10.0;
  parameter Real to = 0.05;
  Real i(start=0.0);
  Real V,Vr;
  Real u;
equation
  Vr = R*i;
  i = C*der(V);
  u - Vr = V;
  u = if time < to then 0.0 else Vo;
end Circuito_RC_plano;
```

```
model Circuito_RC_fisico
  parameter Modelica.SIunits.Resistance R = 20.0;
  parameter Modelica.SIunits.Capacitance C = 0.001;
  parameter Modelica.SIunits.Voltage Vo = 10.0;
  parameter Modelica.SIunits.Time to = 0.05;
  Modelica.SIunits.ElectricCurrent i(start=0.0);
  Modelica.SIunits.Voltage V,Vr;
  Modelica.SIunits.Voltage u;
equation
  Vr = R*i;
  i = C*der(V);
  u - Vr = V;
  u = if time < to then 0.0 else Vo;
end Circuito_RC_fisico;
```

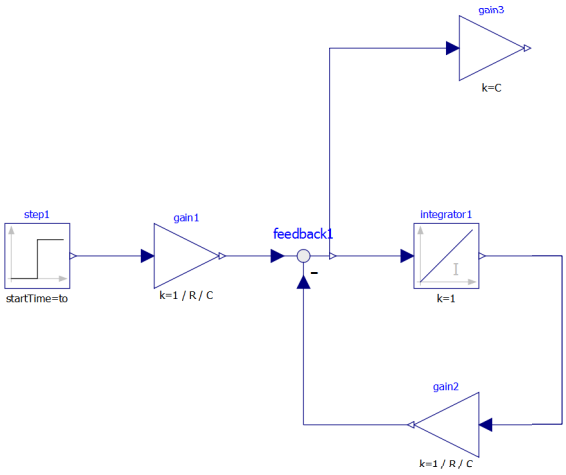
gain3
k=C
step1
startTime=to
gain1
k=1 / R / C
feedback1
-
integrator1
k=1
gain2
k=1 / R / C

```
model Circuito_RC_blocos
  constant Real R = 20.0;
  constant Real C = 0.001;
  constant Real Vo = 10.0;
  constant Real to = 0.05;
  Modelica.Blocks.Continuous.Integrator integrator1 annotation(
    Placement(visible = true, transformation(origin = {44, 0},
extent = {{-10, -10}, {10, 10}}, rotation = 0)));
  Modelica.Blocks.Math.Feedback feedback1 annotation(
    Placement(visible = true, transformation(origin = {0, 0},
extent = {{-10, -10}, {10, 10}}, rotation = 0)));
  Modelica.Blocks.Math.Gain gain1(k = 1 / R / C)  annotation(
    Placement(visible = true, transformation(origin = {-36, 0},
extent = {{-10, -10}, {10, 10}}, rotation = 0)));
  Modelica.Blocks.Math.Gain gain2(k = 1 / R / C)  annotation(
    Placement(visible = true, transformation(origin = {44, -52},
extent = {{10, -10}, {-10, 10}}, rotation = 0)));
  Modelica.Blocks.Math.Gain gain3(k = C)  annotation(
    Placement(visible = true, transformation(origin = {58, 64},
extent = {{-10, -10}, {10, 10}}, rotation = 0)));
  Modelica.Blocks.Sources.Step step1(height = Vo, startTime = to)
annotation(
    Placement(visible = true, transformation(origin = {-82, 0},
extent = {{-10, -10}, {10, 10}}, rotation = 0)));
equation
  connect(gain3.u, feedback1.y) annotation(
    Line(points = {{46, 64}, {8, 64}, {8, 0}, {10, 0}}, color =
{0, 0, 127}));
  connect(gain2.y, feedback1.u2) annotation(
    Line(points = {{32, -52}, {0, -52}, {0, -8}, {0, -8}}, color
= {0, 0, 127}));
  connect(integrator1.y, gain2.u) annotation(
    Line(points = {{56, 0}, {80, 0}, {80, -52}, {56, -52}, {56,
-52}}, color = {0, 0, 127}));
  connect(feedback1.y, integrator1.u) annotation(
    Line(points = {{10, 0}, {32, 0}, {32, 0}, {32, 0}}, color =
{0, 0, 127}));
  connect(gain1.y, feedback1.u1) annotation(
    Line(points = {{-24, 0}, {-8, 0}, {-8, 0}, {-8, 0}}, color =
{0, 0, 127}));
  connect(gain1.u, step1.y) annotation(
    Line(points = {{-48, 0}, {-72, 0}, {-72, 0}, {-70, 0}}, color
= {0, 0, 127}));
  annotation(
    uses(Modelica(version = "3.2.2")));
end Circuito_RC_blocos;
```

```
connector pin
  flow Real i;
  Real v;
end pin;
```

```
model resistor
  parameter Real R = 20.0;
  pin p, n;
equation
  R*p.i = p.v - n.v;
  p.i + n.i = 0;
end resistor;
```

```
model capacitor
  parameter Real C = 0.001;
  pin p, n;
  Real v;
equation
  v = p.v - n.v;
  p.i = C*der(v);
  p.i + n.i = 0;
end capacitor;
```

```
model terra
  pin g;
equation
  g.v = 0.0;
end terra;
```

```
model fonte_degrau
  parameter Real Vo = 10.0;
  parameter Real to = 0.05;
  pin p, n;
equation
  p.v - n.v = if time < to then 0.0 else Vo;
  p.i + n.i = 0;
end fonte_degrau;
```

```
model Circuito_RC_compontes
  resistor R(R=20.0);
  capacitor C(C=0.001);
  fonte_degrau u(Vo = 10.0, to=0.05);
  terra p;
equation
  connect(u.p,R.p);
  connect(R.n,C.p);
  connect(C.n,p.g);
  connect(p.g,u.n);
end Circuito_RC_compontes;
```

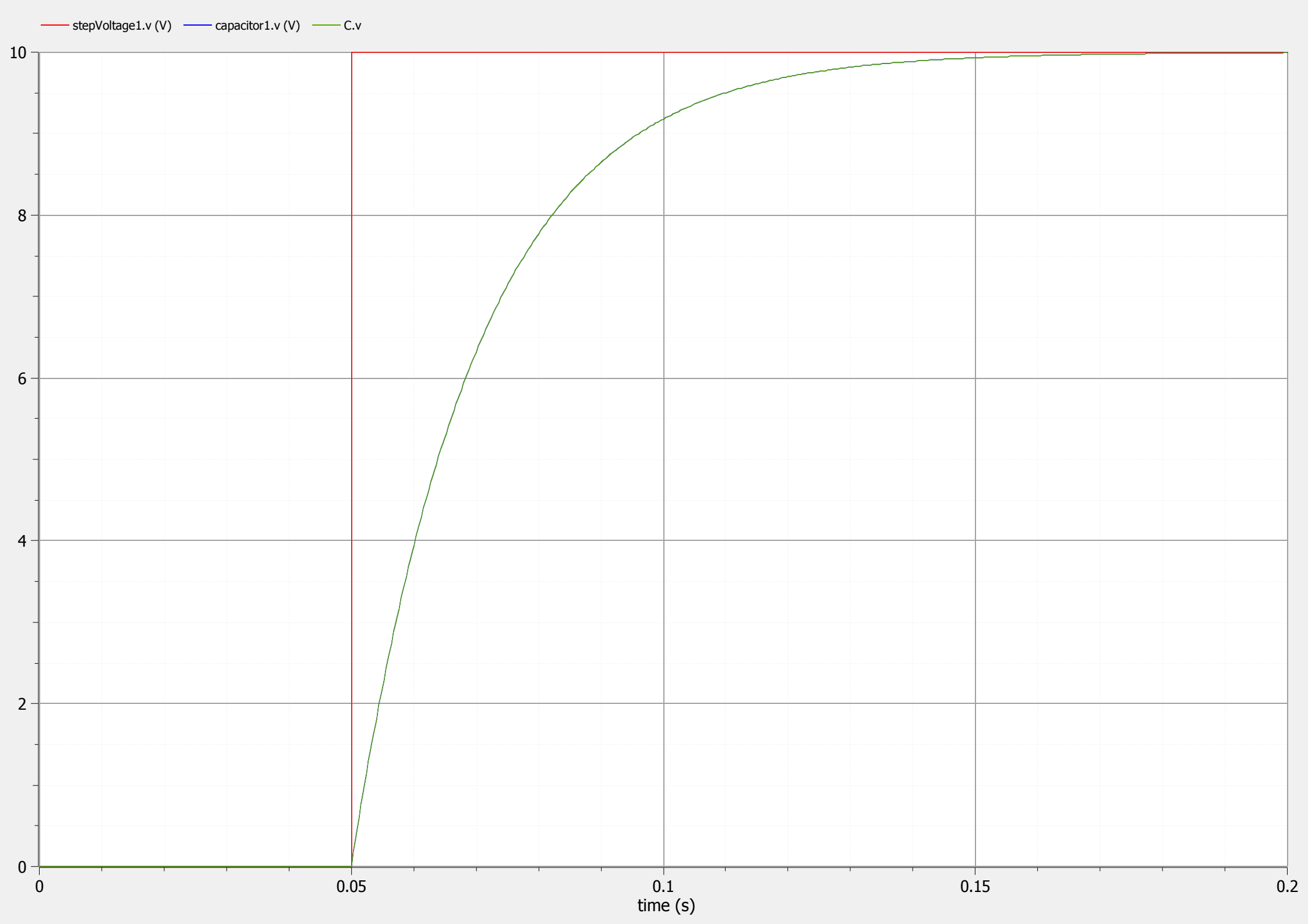
stepVoltage1.v (V)
capacitor1.v (V)
C.v
10
8
6
4
2
0
0
0.05
0.1
0.15
0.2
time (s)