PMR 5237

Modelagem e Design de Sistemas Discretos em Redes de Petri

Aula 7: Propriedades da Redes P/T e Coloridas

Prof. José Reinaldo Silva
reinaldo@usp.br

Plano de Aulas

Aula	Tema	Data
Aula7	Propriedades das redes P/T e Coloridas	9/11
Aula8	Análise de Invariantes	16/11
Aula9	Técnicas de modelagem	23/11
Aula10	Métodos de Design orientados a estados	30/11
Aula11	Métodos de Design orientados a eventos	07/12
Aula12	Perspectivas de pesquisa em modelagem de sistemas discretos com RdP	14/12

Sincronismo com o livro texto

1. **Introduction** 7

2. **Essential Features of Petri Nets** 9
   - 2.1 Locality and Concurrency 10
   - 2.2 Graphical and Algebraic Representation 12
   - 2.3 Concurrency, Conflict, and Confusion 15
   - 2.4 Refinement and Composition 18
   - 2.5 Net Morphisms 23

3. **Intuitive Models** 29
   - 3.1 Arc-Constant Nets 29
   - 3.2 Place/Transition Nets 32
   - 3.3 Coloured Nets 34
   - 3.4 Foldings 38

4. **Basic Definitions** 41
   - 4.1 Formal Definition of Place/Transition Nets 41
   - 4.2 Formal Definition of Arc-Constant Nets 43
   - 4.3 Formal Definition of Coloured Nets 45

5. **Properties** 53
   - 5.1 Basic Properties 54
   - 5.2 An Introduction to the Analysis 58
     - 5.2.1 Verification Based on the Reachability Graph 60
     - 5.2.2 Verification Based on Linear Invariants 68

6. **Overview of the Book** 73

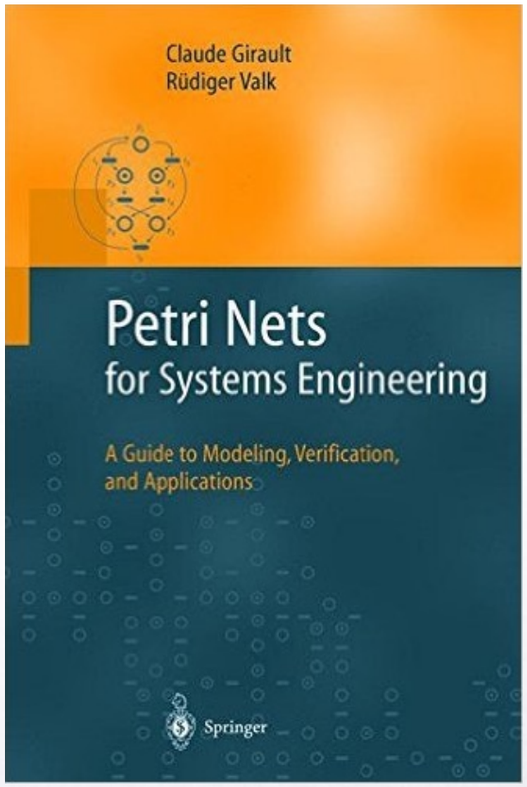

Na aula passada exploramos as redes coloridas, uma versão das redes HLPN, e deixamos no ar uma questão relevante, relacionada com o processo de simetria e uso do teorema que relaciona as redes P/T e as redes de Alto nível em geral.

Rede de Alto Nível ou Colorida

Modelar esse sistema em redes CPN (sem um modelo prévio em redes P/T).

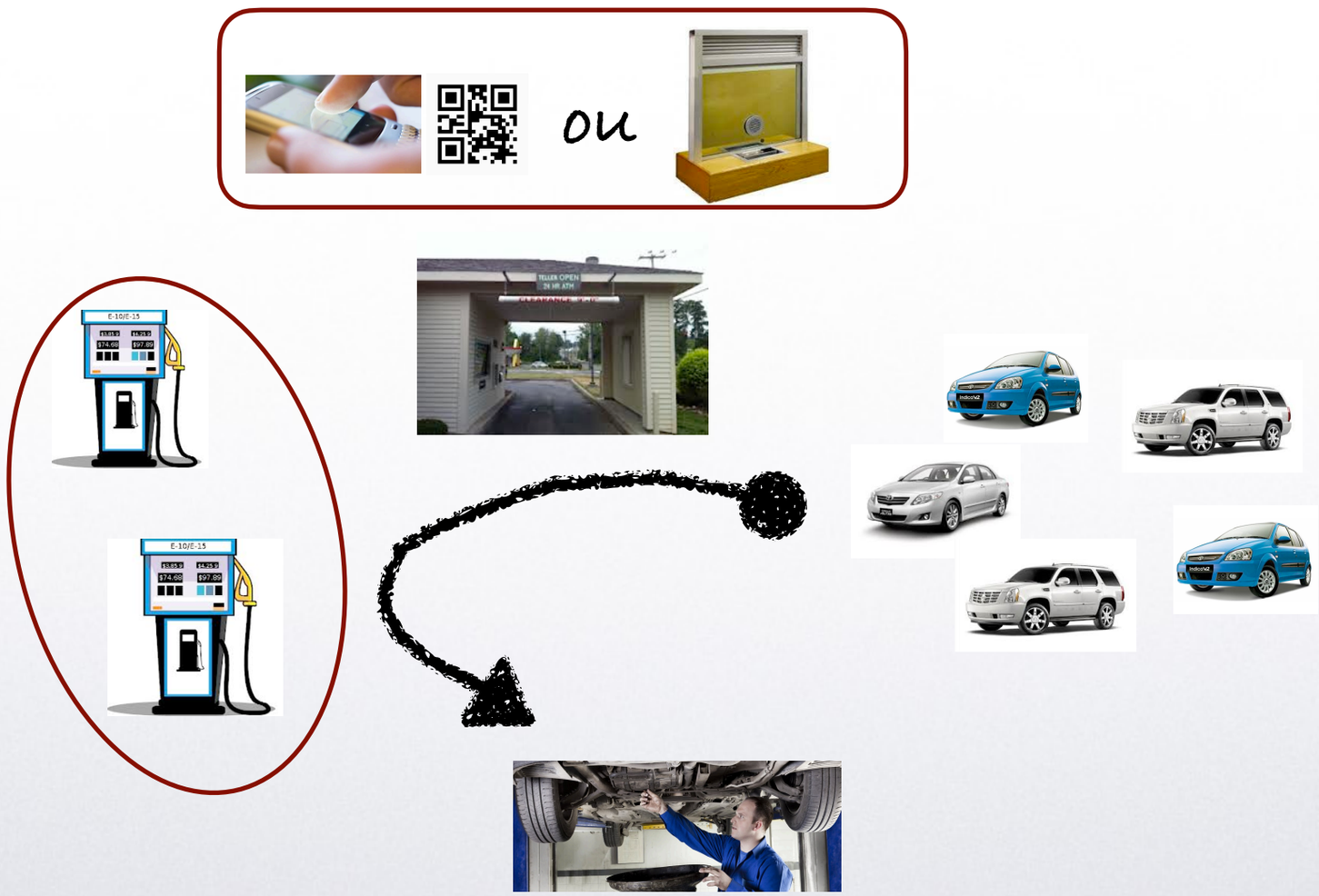

Sempre vale a pena o dobramento?

Rede P/T

Rede de Alto Nível ou Colorida

The Gas Station Problem

del Foyo, P.M.G., Salmon, A.O., Silva, J.R.; Requirements Analysis of Automated Problems Using UML/Petri Nets, Proc. of the 21st. Congress of Mech. Eng., Natal, 2011.

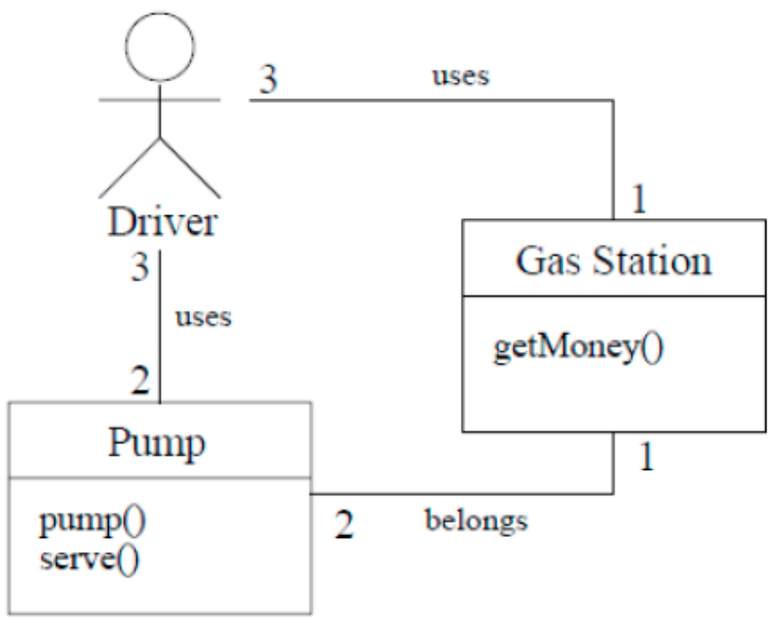

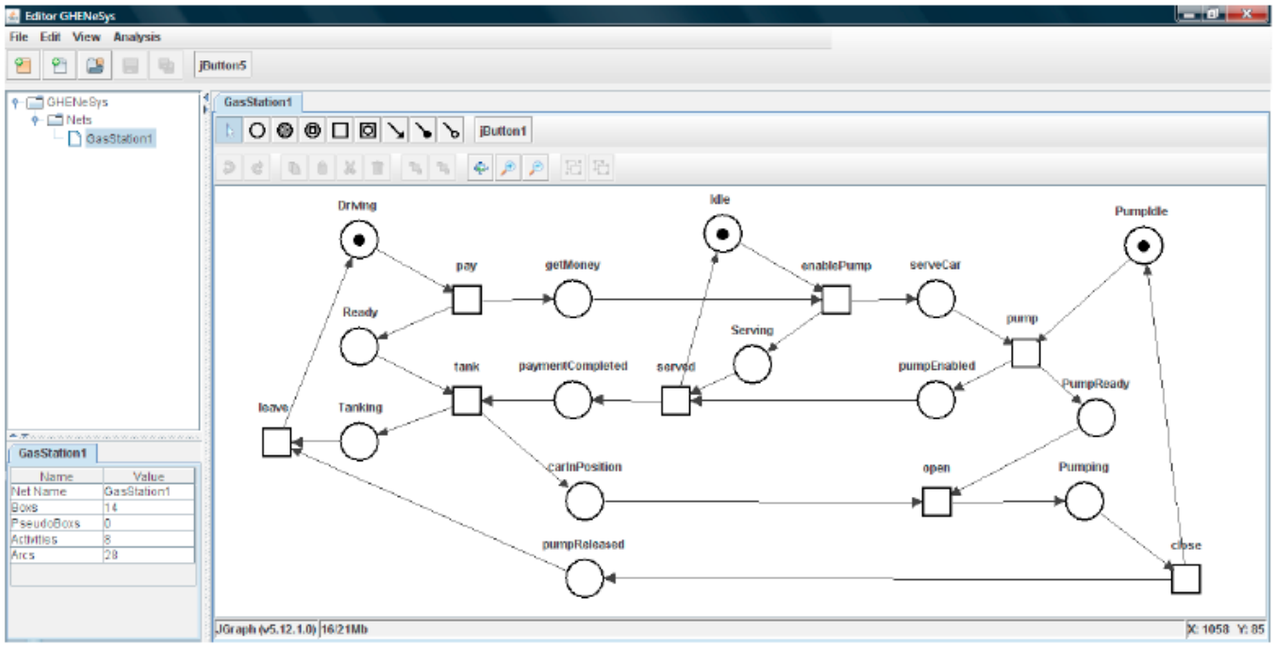

Baresi, L. and Pezze, M., 2001. "Improving UML with petri nets". In *UNIGRA 2001, Uniform Approaches to Graphical Process Specification Techniques (a Satellite Event of ETAPS 2001)*. Elsevier, Vol. 44 of *Electronic Notes in Theoretical Computer Science*, pp. 107–119.

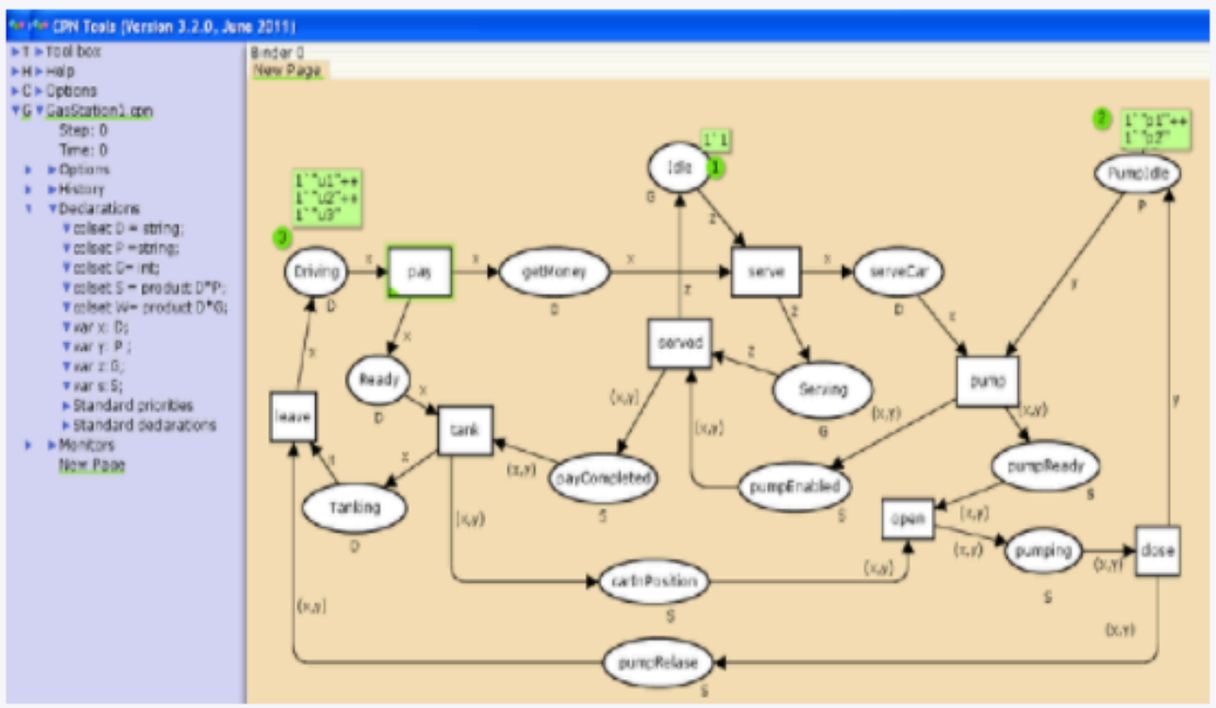
CPN Tools (Version 3.2.0, June 2011)
Binder 0
New Page
Idle
Driving
pay
getMoney
serve
serveCar
Pumpidle
served
Serving
pump
Ready
tank
leave
payCompleted
pumpEnabled
pumpReady
Tanking
open
pumping
close
carInPosition
pumpRelase

tazwid
Inc.
SUSIE'S BIG ADVENTURE
JEDDAH DAILY PHOTO

Redes clássicas (P/T)

Redes coloridas (CPN)

Mesma capacidade
de expressão

Rede de Alto Nível ou
Colorida

Em ambos os casos o processo de modelagem de sistemas pode ser feito por abstração de um modelo físico ou arquetípico (que ainda não existe, ou requisitos), cujo comportamento dinâmico é sintetizado em uma rede.

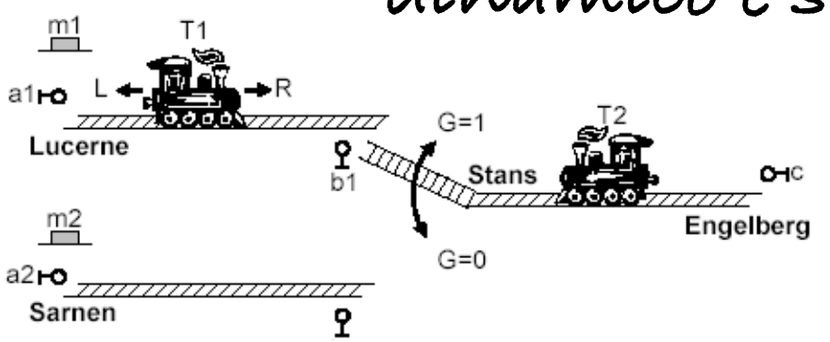

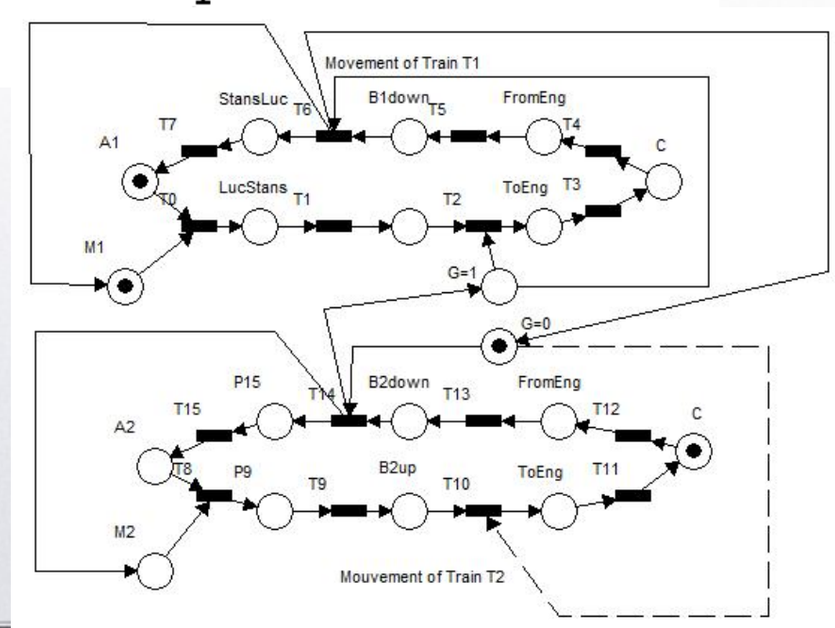

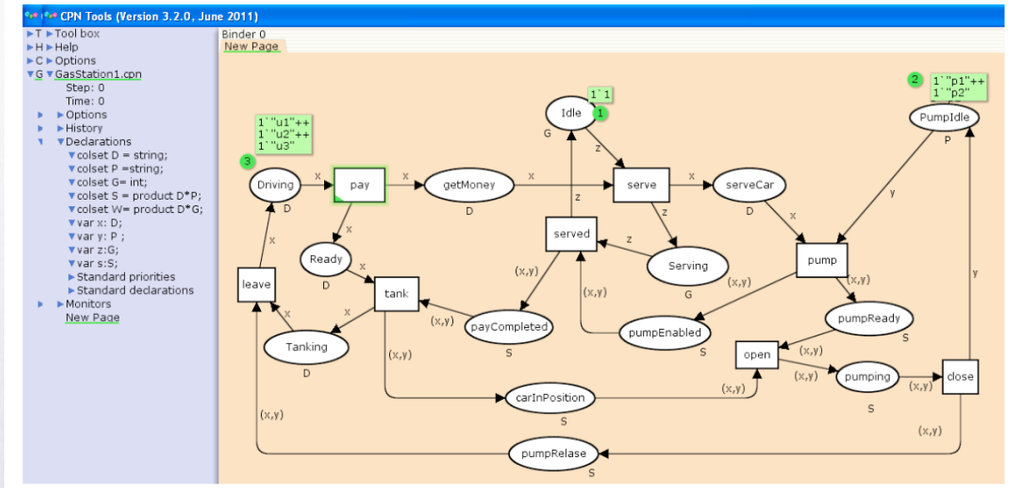

A diferença entre estes dois casos está na habilidade e intuição para sintetizar uma interpretação de um sistema físico (ou arquétipo) em uma rede P/T ou CPN. Certamente os modelos lineares e menos abstratos parecem mais simples.

Kurt Jensen
Univ. of Ahrus, Demark

An Introduction to the Practical Use of Coloured Petri Nets

Kurt Jensen
Department of Computer Science, University of Aarhus
Ny Munkegade, Bldg. 540, DK-8000 Aarhus C, Denmark

Phone: +45 89 42 32 34, Telefax: +45 89 42 32 55
E-mail: kjensen@daimi.aau.dk, WWW: http://www.daimi.aau.dk/~kjensen/

Abstract: The development of Coloured Petri Nets (CP-nets or CPN) has been driven by the desire to develop a modelling language – at the same time theoretically well-founded and versatile enough to be used in practice for systems of the size and complexity found in typical industrial projects. To achieve this, we have combined the strength of Petri nets with the strength of programming languages. Petri nets provide the primitives for describing synchronisation of concurrent processes, while programming languages provide the primitives for definition of data types and manipulation of their data values.

The paper focuses on the practical use of Coloured Petri Nets. It introduces the basic ideas behind the CPN language, and it illustrates how CPN models can be analysed by means of simulation, state spaces and condensed state spaces. The paper

Na medida em que as aplicações da modelagem de sistemas em redes de Petri evoluem e se diversificam, é preciso avançar também na estruturação do processo de modelagem e design, sem atrelar esse processo à aplicação.

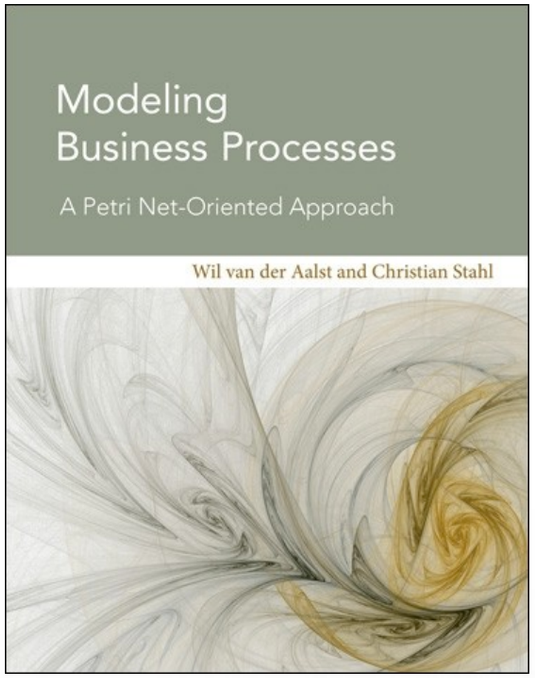

Existe um processo geral de design? (GDT, 1981)

Existe um processo geral de modelagem e design de sistemas? (GSED, 2010)

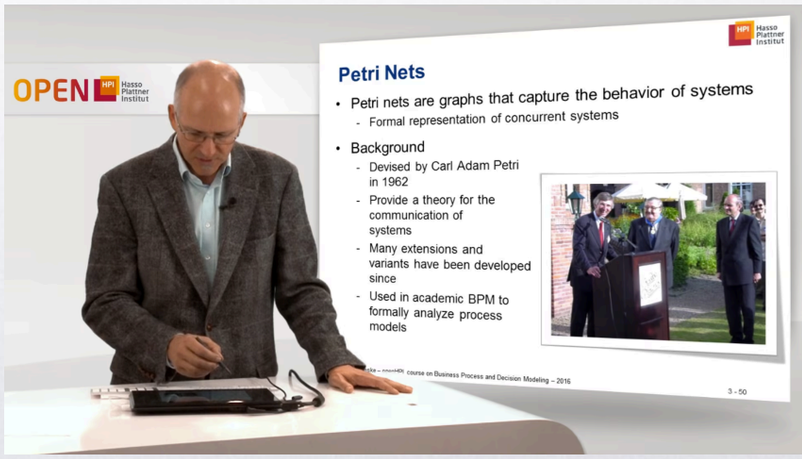

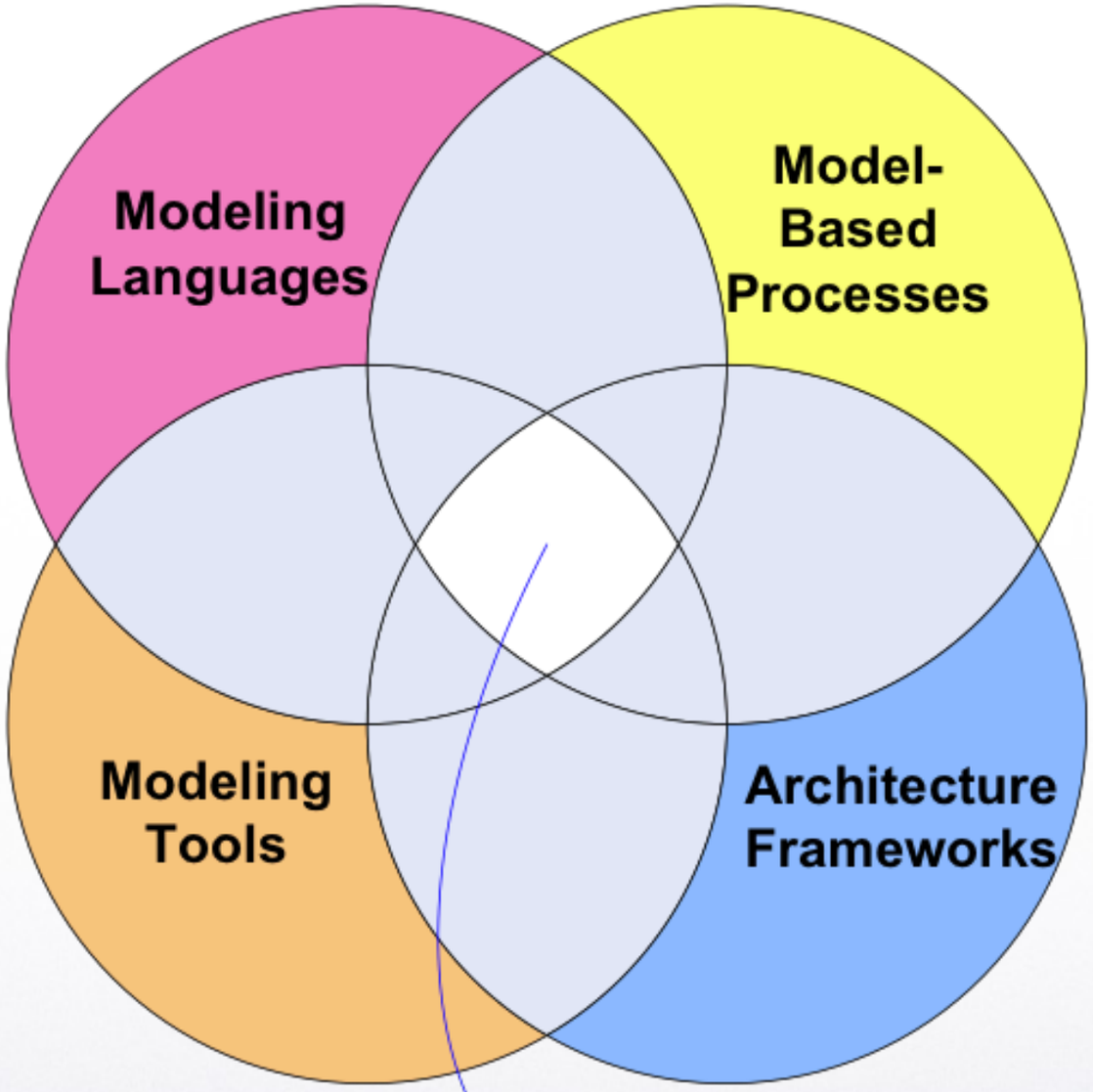

maximum system architecture effectiveness

General Systems Engineering Design

method name	paradigm	formality	graphical representation	object-oriented
Action Systems	state transition	formal	no	no
B	state transition	formal	no	no
CASL	algebra	formal	no	yes
Cleanroom & JSD	traces & process algebra	formal	yes	no
COQ	state transition	formal	no	no
Estelle	state transition	formal	no	no
LOTOS	process algebra	formal	no	yes
OMT & B	state transition	formal	yes	yes
Petri Nets	state transition	formal	yes	no
Petri Nets with Objects	state transition	formal	yes	yes
SART	state transition	informal & semi-formal	yes	no
SAZ	state transition	semi-formal & formal	yes	no
SCCS	process algebra	formal	no	no
SDL	state transition	formal	yes	yes
UML	state transition	informal & semi-formal	yes	yes
VHDL	state transition	formal	no	no
Z	state transition	formal	no	no

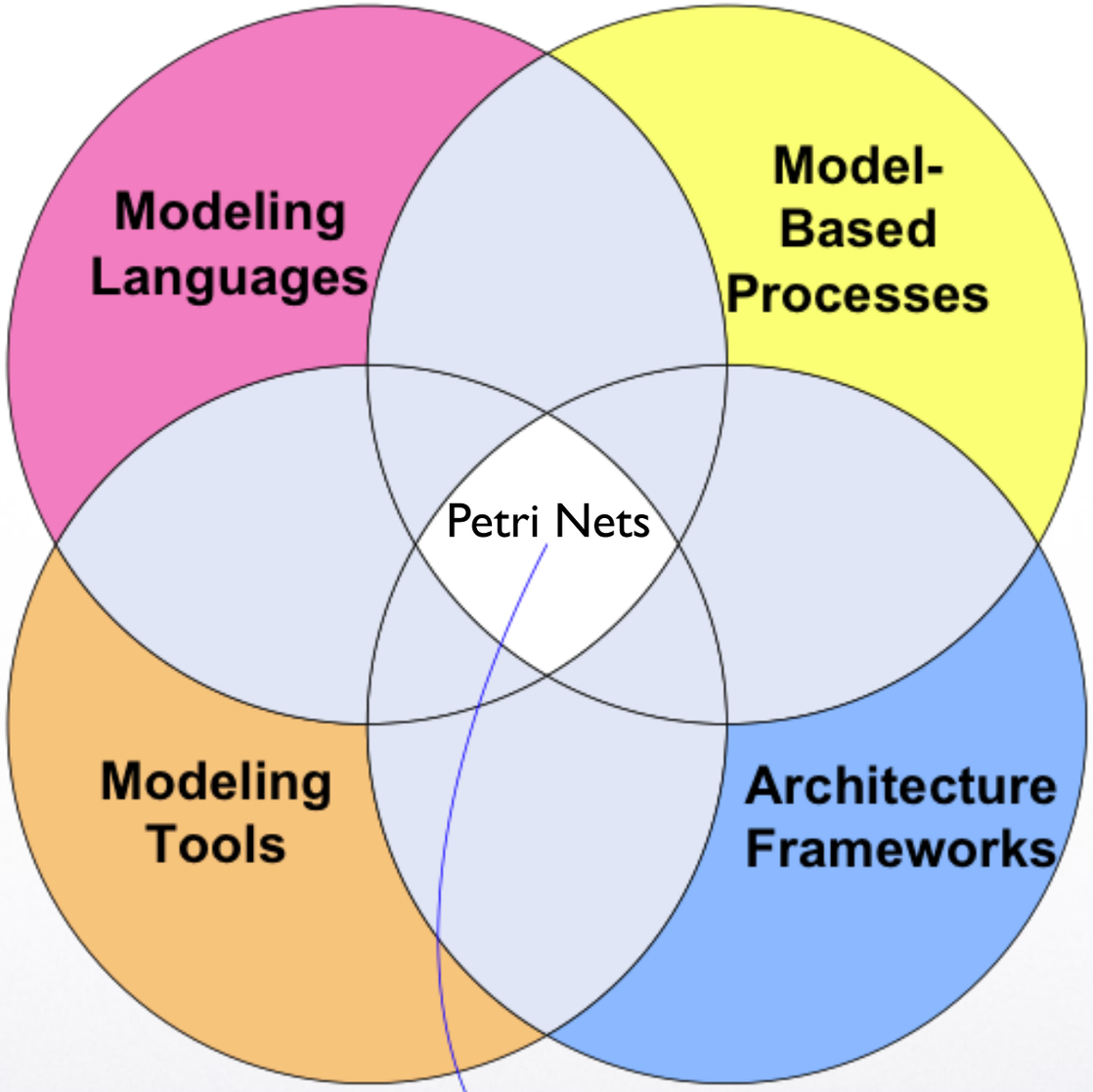

maximum system architecture effectiveness

C. Girault
R. Valk
(Eds.)

Petri Nets for Systems Engineering

A Guide to Modelling, Verification, and Applications

July 30, 2001

The construction of Petri net models from informal requirement specifications is not a trivial task, and requires a great deal of modeling experience, as well as **knowledge of the techniques** aiding in model construction. As a result, a Petri net model may differ considerably from its original specification. This is especially true when large Petri net models of complex systems are involved.

CPN Property Analysis

ACM Computing Classification (1998): F.1, I.6, D.2.2, D.2.4
c Springer-Verlag Berlin Heidelberg 2009

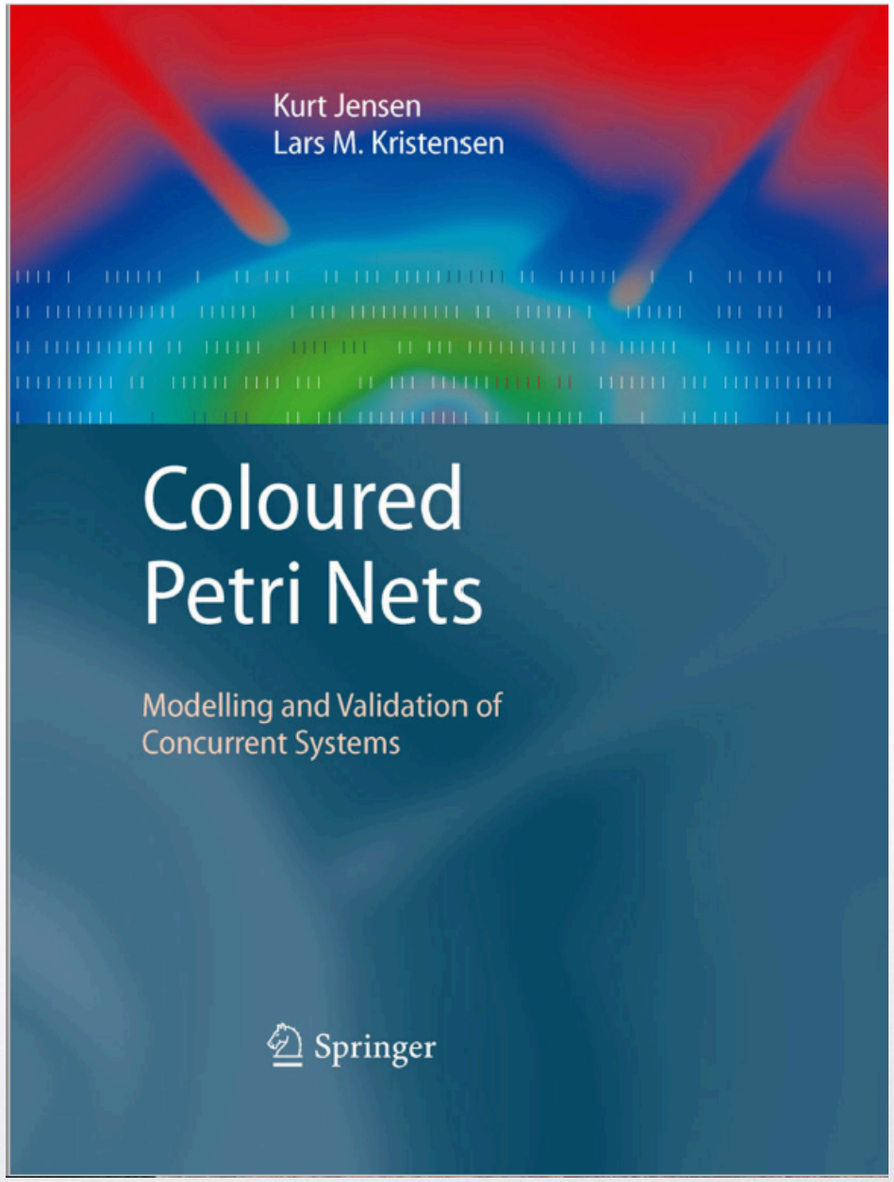

PN Basic Properties

1) *boundedness*, characterising finiteness of the state space.
2) *liveness*, related to potential fireability in all reachable markings. *Deadlock-freeness* is a weaker condition in which global infinite activity (i.e. fireability) of the net system model is guaranteed, but some parts of it may not work at all.
3) *reversibility*, characterising recoverability of the initial marking from any reachable marking.
4) *mutual exclusion*, dealing with the impossibility of simultaneous *submarkings* (p-mutex) or *firing concurrency* (t-mutex).

Boundedness in CPN

1) *boundedness*, characterising finiteness of the state space.
2) *liveness*, related to potential fireability in all reachable markings. *Deadlock-freeness* is a weaker condition in which global infinite activity (i.e. fireability) of the net system model is guaranteed, but some parts of it may not work at all.
3) *reversibility*, characterising recoverability of the initial marking from any reachable marking.
4) *mutual exclusion*, dealing with the impossibility of simultaneous *submarkings* (p-mutex) or *firing concurrency* (t-mutex).

Let be a CPN net $\mathbb{N}$, a generic place p in this net, and $|M(p)|$ the size of the multiset making M. The place p is said bounded iff there is an integer n which is un upper bound of p, that is,

$$\forall M \epsilon \Re(M_0) \,.\, |M(p)| \ll = n.$$

A CPN net is said to be bounded if all its places are bounded.

Definition 9.11. Let a place $p \in P$ and a multiset $m \in C(p)_{MS}$ be given.

1. m is an **upper multiset bound** for p if and only if

$$\forall M \in \mathscr{R}(M_0) : M(p) \ll= m$$

2. m is a **lower multiset bound** for p if and only if

$$\forall M \in \mathscr{R}(M_0) : M(p) \gg= m$$

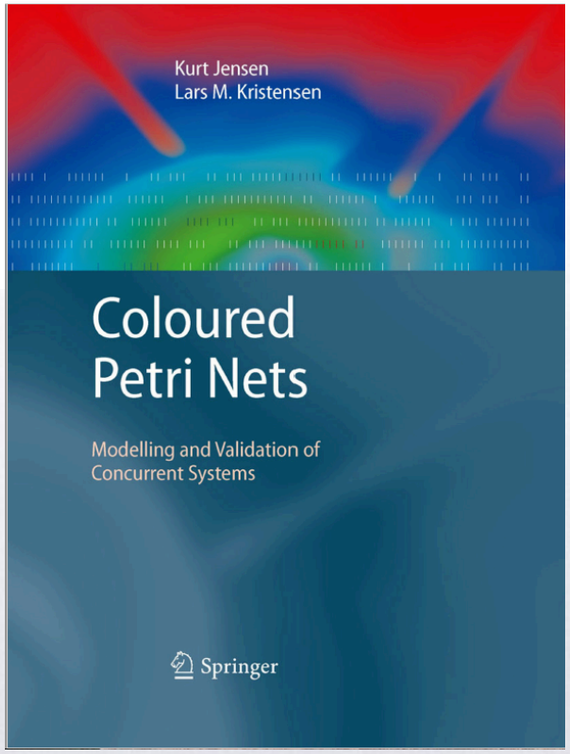

CPN Reachability Analysis

1) *boundedness*, characterising finiteness of the state space.
2) *liveness*, related to potential fireability in all reachable markings. *Deadlock-freeness* is a weaker condition in which global infinite activity (i.e. fireability) of the net system model is guaranteed, but some parts of it may not work at all.
3) *reversibility*, characterising recoverability of the initial marking from any reachable marking.
4) *mutual exclusion*, dealing with the impossibility of simultaneous *submarkings* (p-mutex) or *firing concurrency* (t-mutex).

Reachability analysis in CPN is connected to building a "reachability graph", which is now defined over a special directed graph called **CPN state space**.

1) *boundedness*, characterising finiteness of the state space.
2) *liveness*, related to potential fireability in all reachable markings. *Deadlock-freeness* is a weaker condition in which global infinite activity (i.e. fireability) of the net system model is guaranteed, but some parts of it may not work at all.
3) *reversibility*, characterising recoverability of the initial marking from any reachable marking.
4) *mutual exclusion*, dealing with the impossibility of simultaneous *submarkings* (p-mutex) or *firing concurrency* (t-mutex).

Now, the *reachability problem* for Petri nets is the problem of finding if $M_n \in R(M_0)$ for a given marking M_n in a net (N, M_0). In some applications, one may be interested in the markings of a subset of places and not care about the rest of places in a net. This leads to a *submarking reachability*

Petri Nets: Properties, Analysis and Applications

TADAO MURATA, FELLOW, IEEE

Lifeness (T. Murata)

A transition t is said to be...

0) *dead (L0-live)* if t can never be fired in any firing sequence in $L(M_0)$.
1) *L1-live (potentially firable)* if t can be fired at least once in some firing sequence in $L(M_0)$.
2) *L2-live* if, given any positive integer k, t can be fired at least k times in some firing sequence in $L(M_0)$.
3) *L3-live* if t appears infinitely, often in some firing sequence in $L(M_0)$.
4) *L4-live* or *live* if t is *L1*-live for every marking M in $R(M_0)$.

A very important goal for analysis is if a given system is deadlock-free.

4) *L4-live* or *live* if t is *L1*-live for every marking M in $R(M_0)$.

Def] A transition t is potentially fireable at a given marking m if there exists a transition iff the is a firing sequence σ leading to a marking m' in which t is enabled (i.e. $m \xrightarrow{\sigma} m' \geq Pre[P,t]$).

A P/T net is deadlock-free iff all its transitions are potentially fireable.

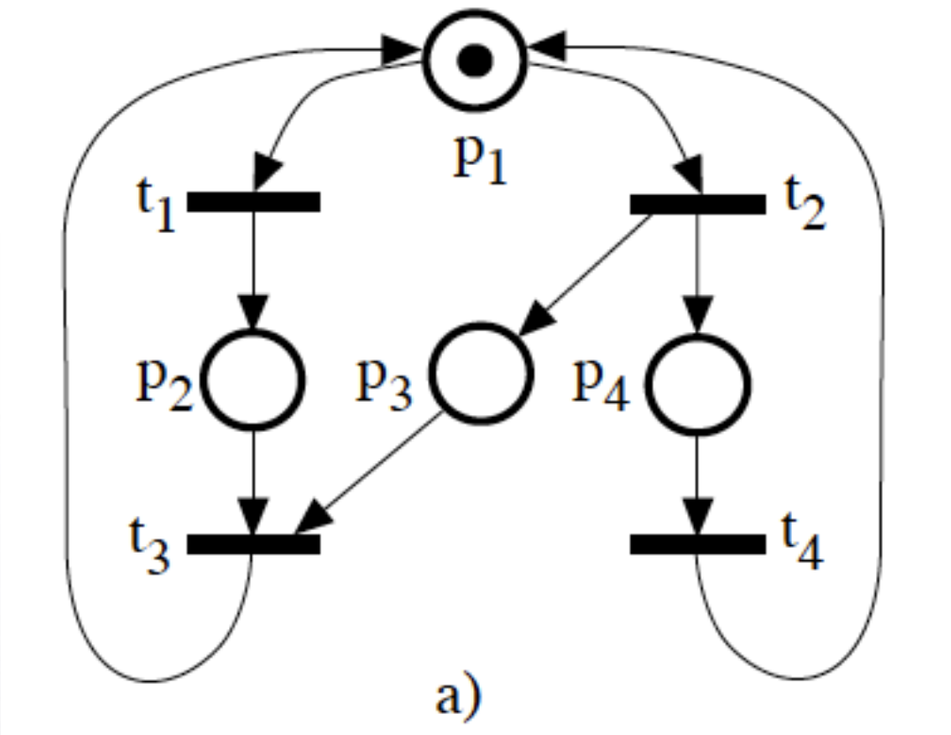

i) se t1 dispara, a rede entra em deadlock;

ii) Se t2 dispara k vezes existirá um número k de marcas em p3.

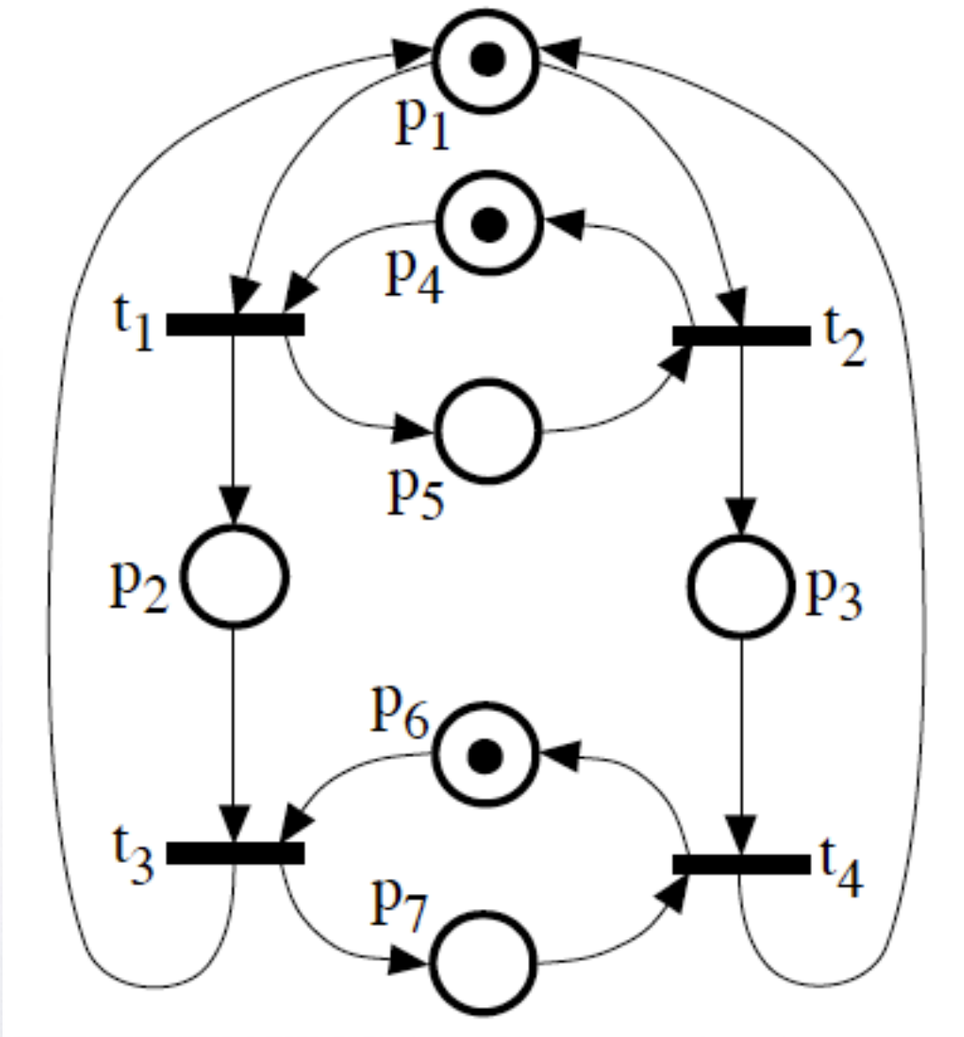

a live net system that by increasing the initial marking (e.g. m0[p5] = 1) can reach a deadlock state!

Reachability Analysis

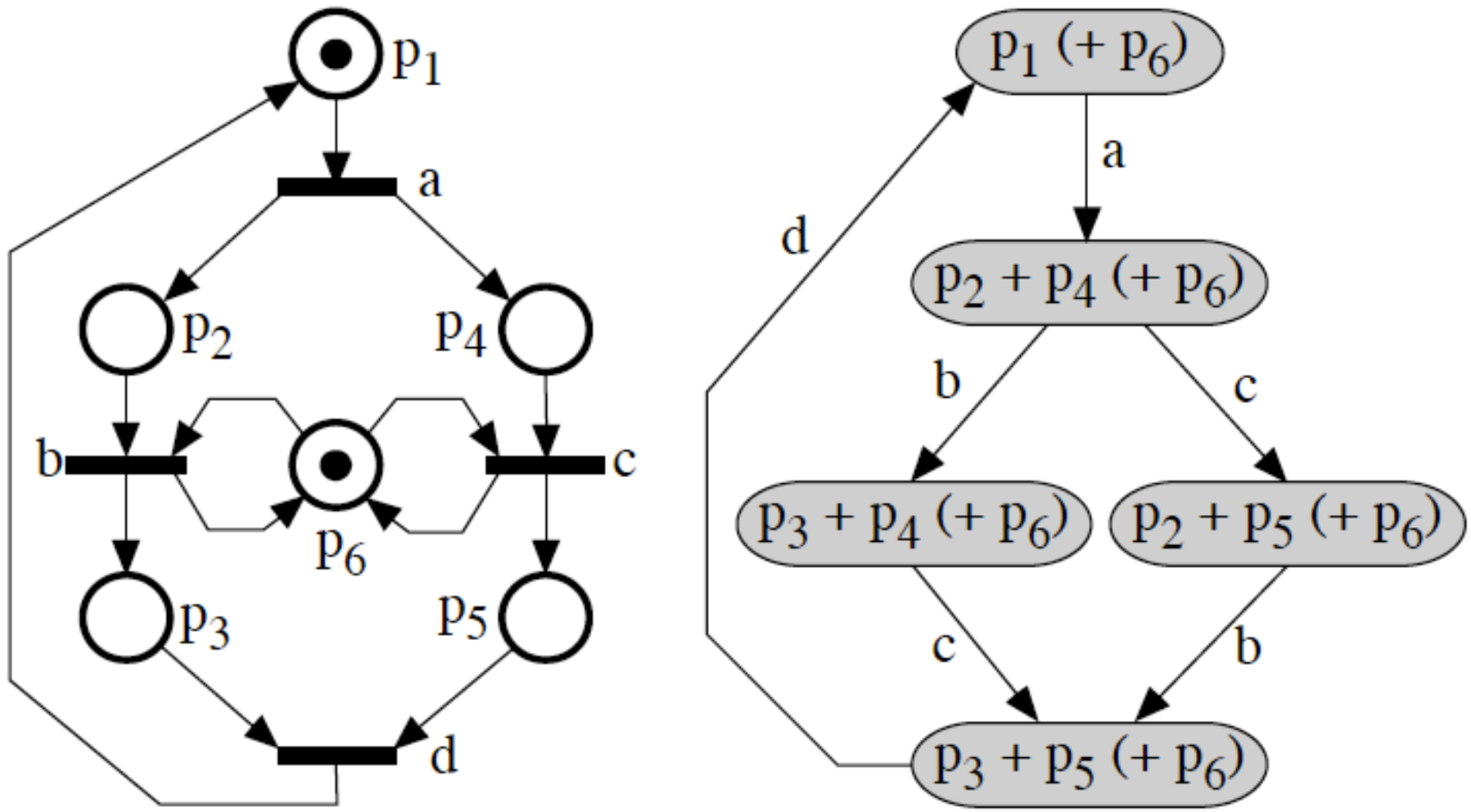

1) *boundedness*, characterising finiteness of the state space.
2) *liveness*, related to potential fireability in all reachable markings. *Deadlock-freeness* is a weaker condition in which global infinite activity (i.e. fireability) of the net system model is guaranteed, but some parts of it may not work at all.
3) *reversibility*, characterising recoverability of the initial marking from any reachable marking.
4) *mutual exclusion*, dealing with the impossibility of simultaneous *submarkings* (p-mutex) or *firing concurrency* (t-mutex).

A CPN net $\mathcal{N}$ is said to be **live** iff $\forall M \exists | M \epsilon L(M_0)$.

A CPN net $\mathcal{N}$ is said to be strongly **live** iff $\forall M \exists | M \epsilon SCC(M_0)$

Proposition 9.8. *Let $SS = (N_{SS}, A_{SS})$ be the finite state space of a Coloured Petri Net, and let $SG = (N_{SG}, A_{SG})$ be the SCC graph. Then the following holds:*

1. *A marking M' is reachable from a marking $M \in \mathscr{R}(M_0)$ if and only if*

$$M' \in \mathscr{R}_{SS}(M)$$

2. *A marking M' is reachable from a marking $M \in \mathscr{R}(M_0)$ if and only if*

$$SCC(M') \in \mathscr{R}_{SG}(SCC(M))$$

3. *A predicate ϕ on markings is reachable if and only if*

$$\exists M \in N_{SS} : \phi(M)$$

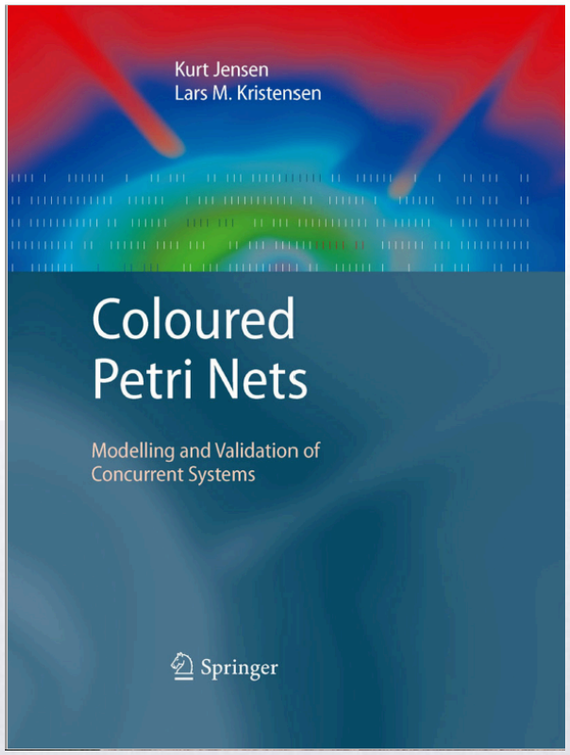

Definition 9.19. Let a transition $t \in T$ and a marking M be given.

1. M is a **dead marking** if and only if

$$\forall t \in T : \neg\,(M \xrightarrow{t})$$

2. t is **dead in** M_0 if and only if

$$\forall M \in \mathscr{R}(M_0) : \neg\,(M \xrightarrow{t})$$

3. t is **live in** M_0 if and only if

$$\forall M \in \mathscr{R}(M_0)\ \exists M' \in \mathscr{R}(M) : M' \xrightarrow{t}$$

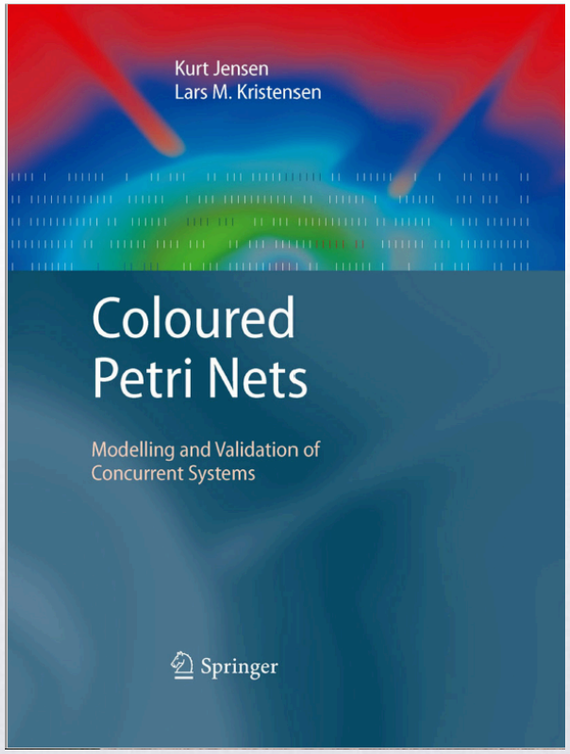

Proposition 9.20. *Let $SG = (N_{SG}, A_{SG})$ be the SCC graph for the finite state space $SS = (N_{SS}, A_{SS})$ of a CP-net. Then the following holds:*

1. *A marking $M \in \mathscr{R}(M_0)$ is dead if and only if*

$$M \text{ is a terminal node of } SS$$

2. *A transition t is dead if and only if*

$$t \notin T(SS)$$

3. *A transition t is live if and only if*

$$\forall S \in SCC_{TM} : t \in T(S)$$

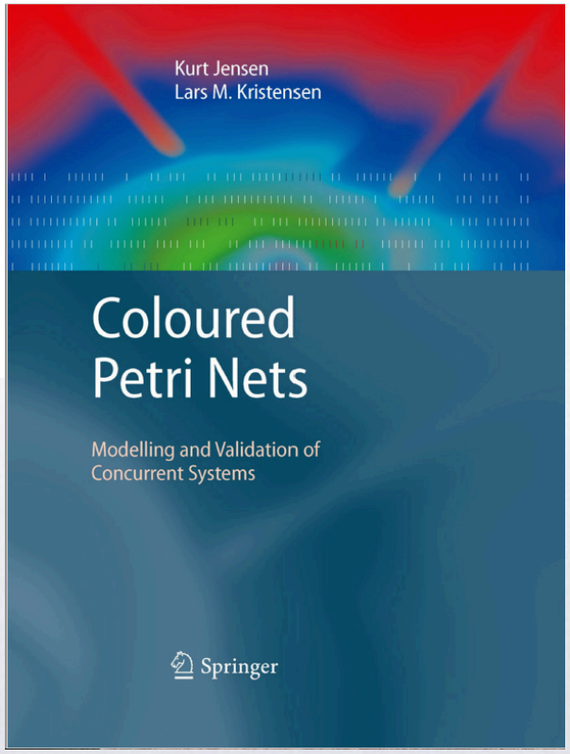

Analysis in CPN Nets

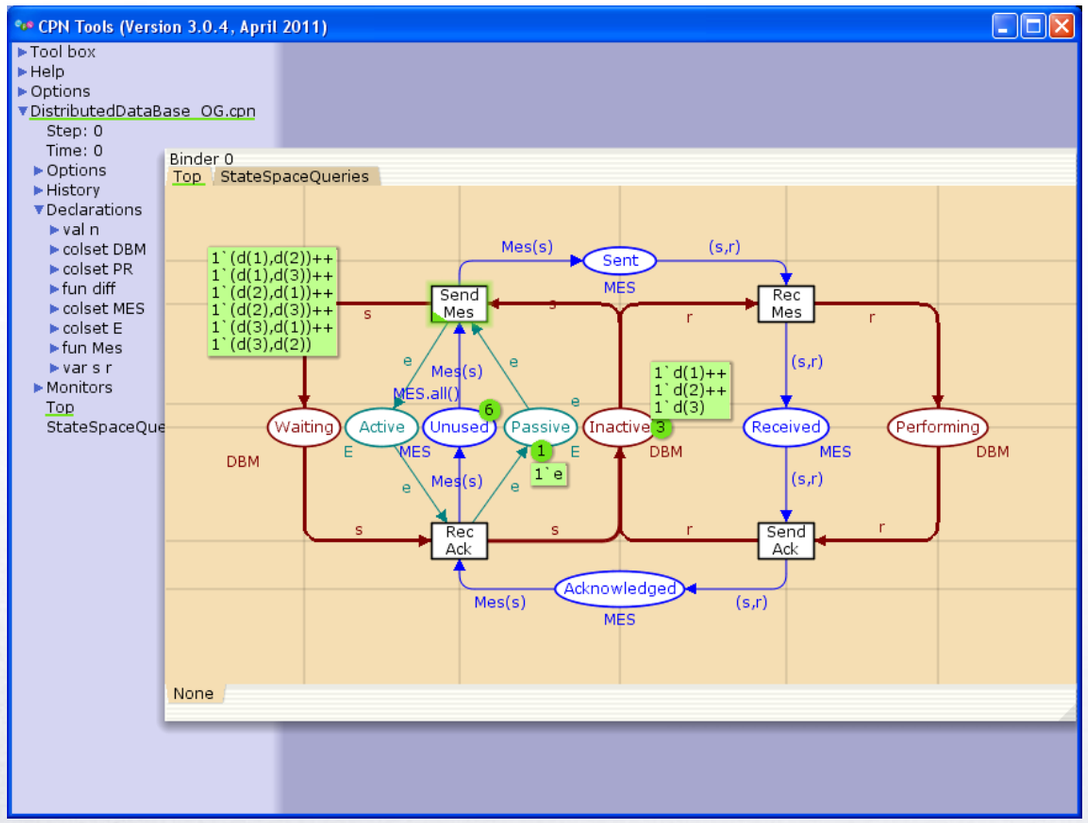

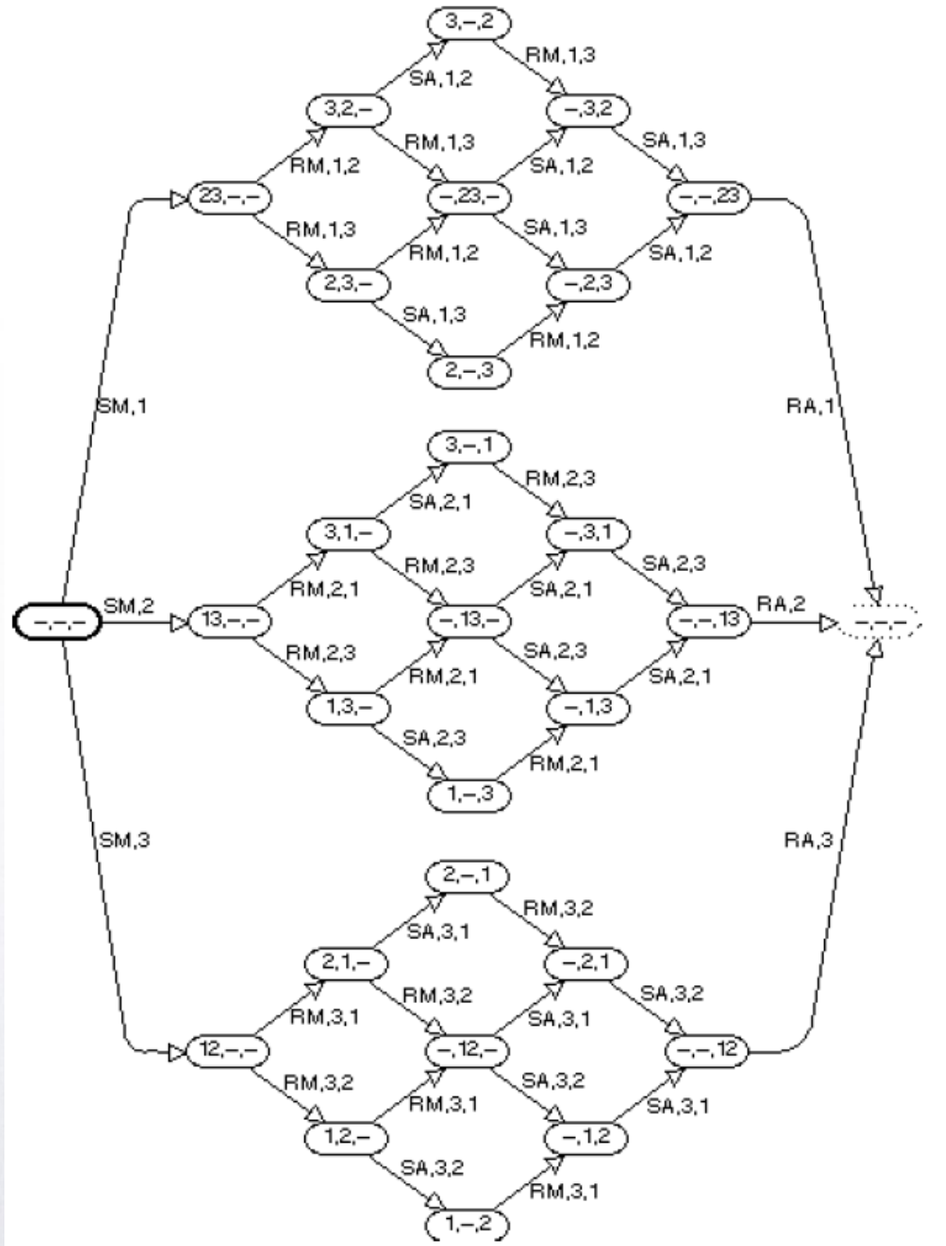

Directed Graphs

Definition 37

A direct graph is tuple $DG = (V, A, N)$ such that:
(i) V is a set of nodes or vertices;
(ii) A is a set of arcs (or edges) such that $V \cap A = \emptyset$;
(III) N is a node function or mapping $A \rightarrow V \times V$.

DG is finite if $V$and A are finite.

Biding

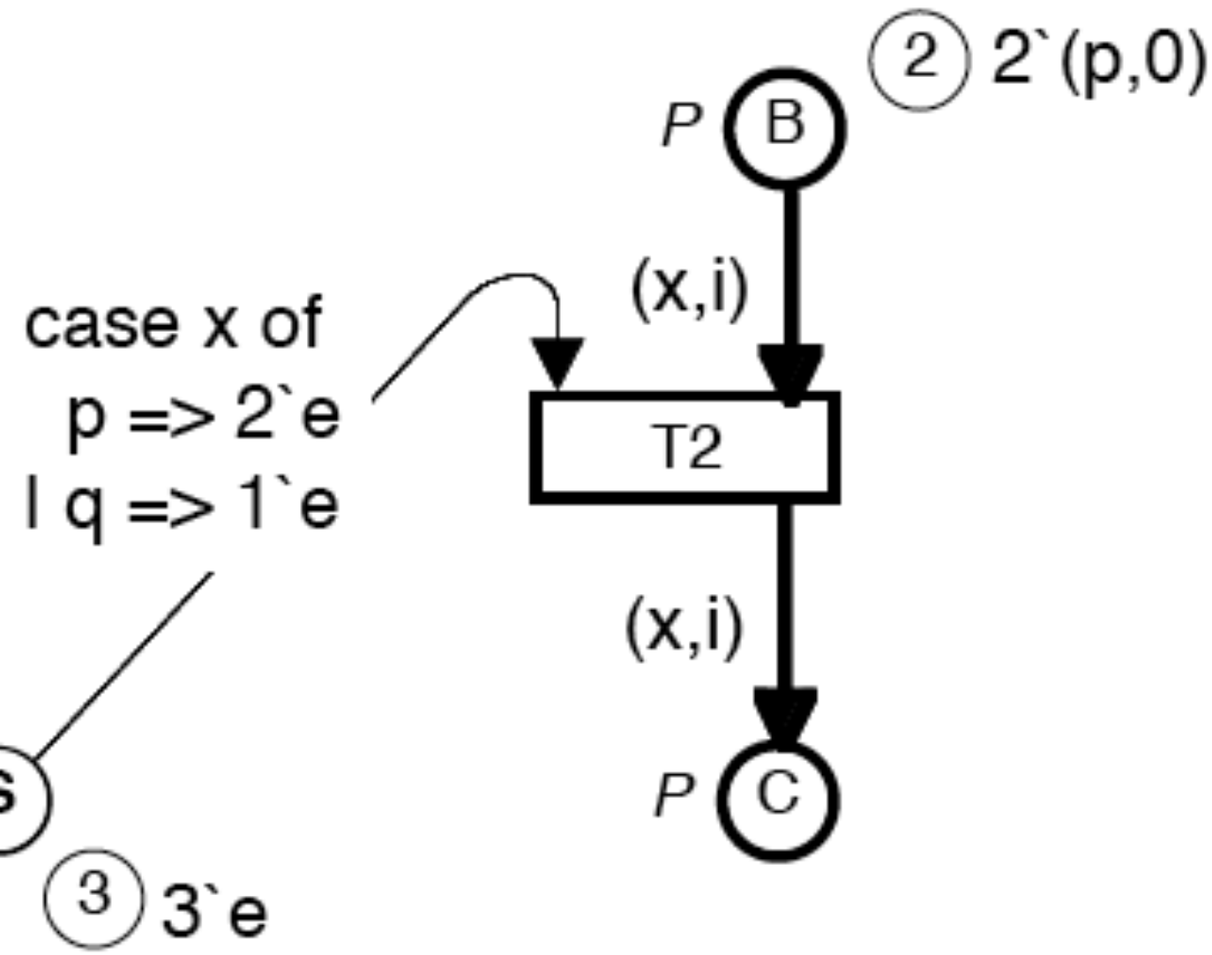

Definition 9.6. The **state space** of a Coloured Petri Net is a directed graph SS $= (N_{SS}, A_{SS})$ with arc labels from BE, where:

1. $N_{SS} = \mathscr{R}(M_0)$ is the set of **nodes**.
2. $A_{SS} = \{(M,(t,b),M') \in N_{SS} \times BE \times N_{SS} \mid M \xrightarrow{(t,b)} M'\}$ is the set of **arcs**.

SS is **finite** if and only if N_{SS} and A_{SS} are finite.

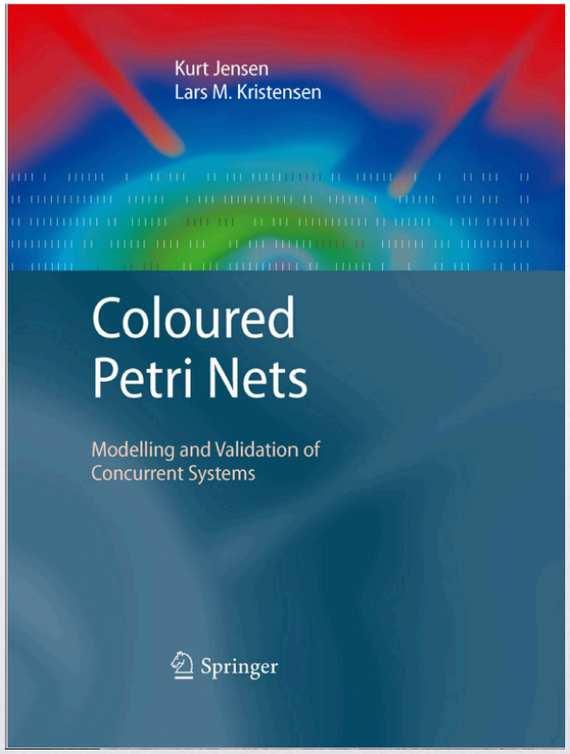

```
NODES ← {M_0}
UNPROCESSED ← {M_0}
ARCS ← ∅
while UNPROCESSED ≠ ∅ do
    Select a marking M in UNPROCESSED
    UNPROCESSED ← UNPROCESSED − {M}
    for all binding elements (t,b) such that M --(t,b)--> do
        Calculate M' such that M --(t,b)--> M'
        ARCS ← ARCS ∪ {(M,(t,b),M')}
        if M' ∉ NODES then
            NODES ← NODES ∪ {M'}
            UNPROCESSED ← UNPROCESSED ∪ {M'}
        end if
    end for
end while
```

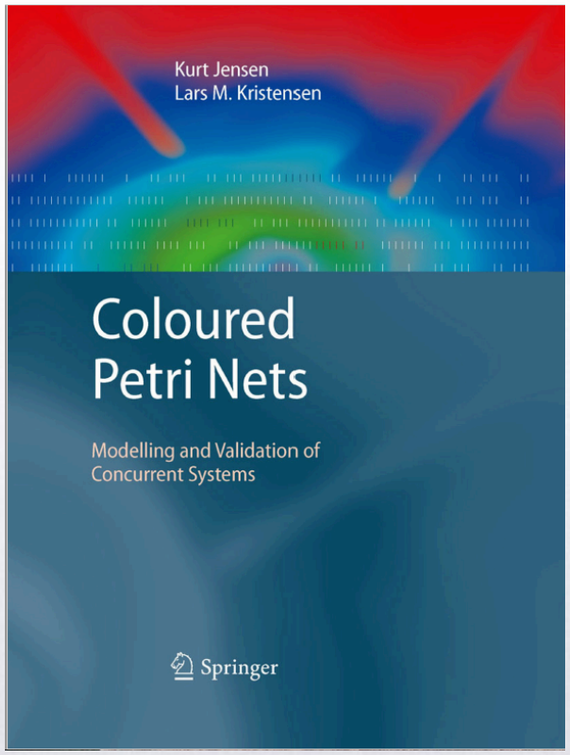

Proposition 9.7. *Let $SS = (N_{SS}, A_{SS})$ be the state space of a Coloured Petri Net CPN and let $M_1 \in \mathscr{R}(M_0)$. Then the following holds:*

1. $M_1 \xrightarrow{be_1} M_2 \xrightarrow{be_2} M_3 \cdots M_k \xrightarrow{be_k} M_{k+1}$ *is a finite occurrence sequence of CPN if and only if* $M_1\,(M_1, be_1, M_2)\,M_2\,(M_2, be_2, M_3)\,M_3 \cdots M_k\,(M_k, be_i, M_{k+1})\,M_{k+1}$ *is a finite directed path in SS.*
2. $M_1 \xrightarrow{be_1} M_2 \xrightarrow{be_2} M_3 \cdots$ *is an infinite occurrence sequence of CPN if and only if* $M_1\,(M_1, be_1, M_2)\,M_2\,(M_2, be_2, M_3)\,M_3 \cdots$ *is a infinite directed path in SS.*

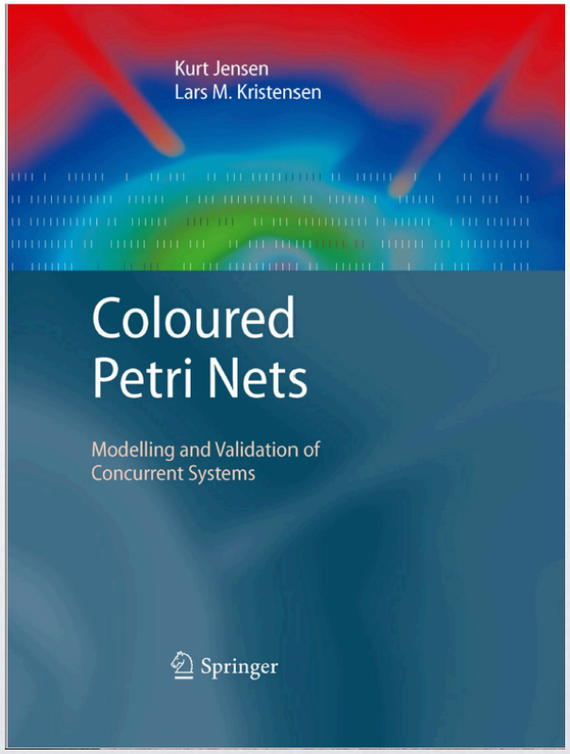

1) *boundedness*, characterising finiteness of the state space.
2) *liveness*, related to potential fireability in all reachable markings. *Deadlock-freeness* is a weaker condition in which global infinite activity (i.e. fireability) of the net system model is guaranteed, but some parts of it may not work at all.
3) *reversibility*, characterising recoverability of the initial marking from any reachable marking.
4) *mutual exclusion*, dealing with the impossibility of simultaneous *submarkings* (p-mutex) or *firing concurrency* (t-mutex).

Def] Let be the P/T net $N = (S, T, F; W, M_0)$. A generic state defined over this net X $\subset S$ is said to be a **home state** iff X can be reached from any reachable marking.

1) *boundedness*, characterising finiteness of the state space.
2) *liveness*, related to potential fireability in all reachable markings. *Deadlock-freeness* is a weaker condition in which global infinite activity (i.e. fireability) of the net system model is guaranteed, but some parts of it may not work at all.
3) *reversibility*, characterising recoverability of the initial marking from any reachable marking.
4) *mutual exclusion*, dealing with the impossibility of simultaneous *submarkings* (p-mutex) or *firing concurrency* (t-mutex).

A Petri net (N, M_0) is said to be *reversible* if, for each marking M in $R(M_0)$, M_0 is reachable from M. Thus, in a reversible net one can always get back to the initial marking or state.

Petri Nets: Properties, Analysis and Applications

TADAO MURATA, FELLOW, IEEE

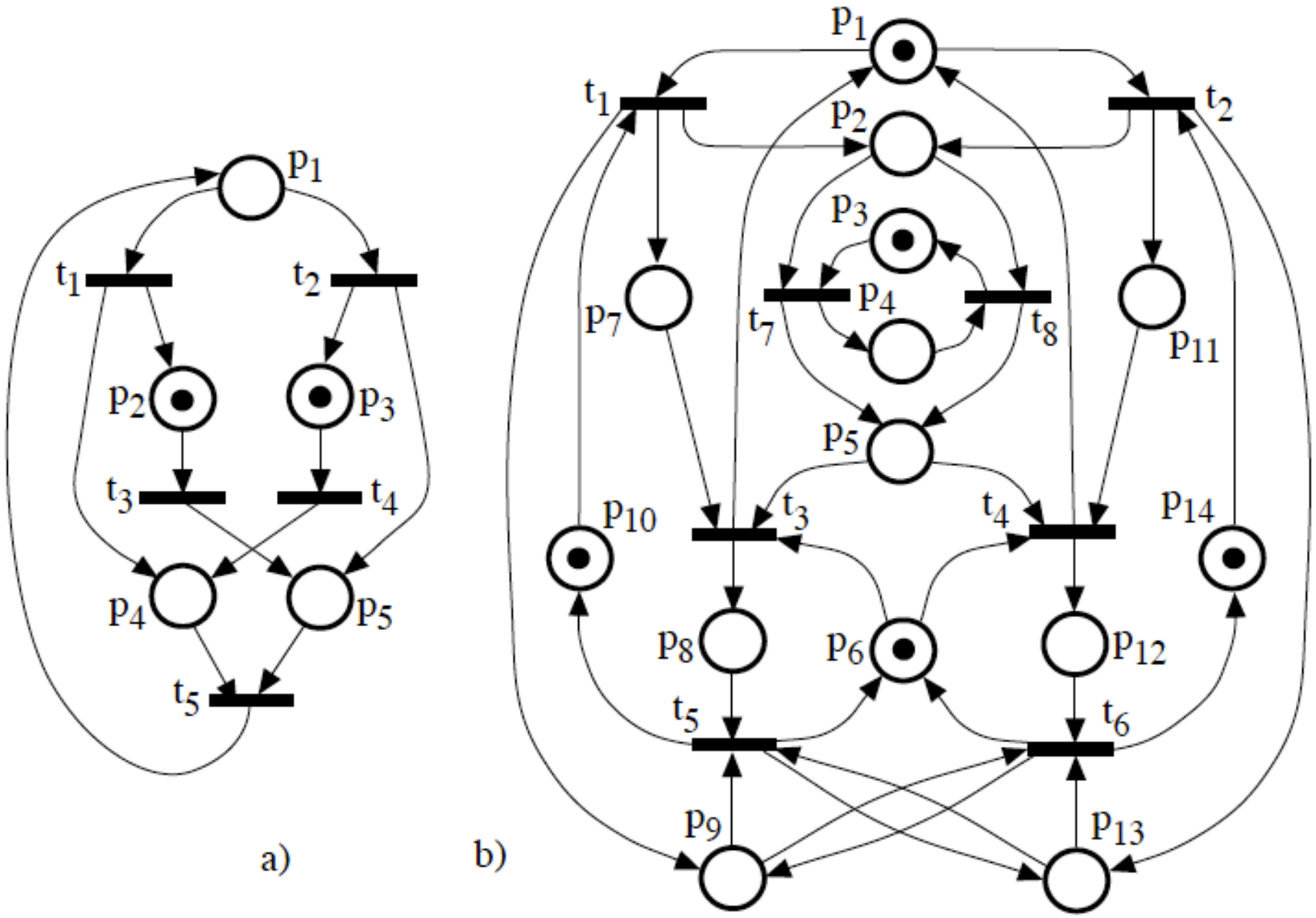

Fig. 5.3. On home states: (a) The initial marking is not a home state, but all successor markings are home states; (b) Net system that presents two livelocks, so there are no home states.

Frequently, dynamic systems must have a "home state", defined as states that can be reached from whichever state the system might be in.

Existence of home states i

decidabl

Eike Best[1*], J

[1] Departmen
Carl von Ossietzky
eike.best@i
[2] Fa
Technisch

Abstract. W
a home sta
decidable
Keywo

1 In

Fr ome states", which are defined as
whichever state the system might be in. In various
ices, home states may be entered automatically after periods of inactivity, or may be forced to be reached by pushing a "reset" button. In self-stabilising systems [3], failure states can be recovered from automatically, preferably ending up in regular, non-erroneous home states. In Markov chain theory, home states are called "essential" states [2] a particularly important class being that of the "recurrent" states.

The main two decision problems concerning home states are (1) given a dynamic system S and a state q, is q a home state of S ? and (2) given a system S, does it have a home state? We call them the home state problem (HSP) and the home state existence problem (HSEP), respectively.

1) *boundedness*, characterising finiteness of the state space.
2) *liveness*, related to potential fireability in all reachable markings. *Deadlock-freeness* is a weaker condition in which global infinite activity (i.e. fireability) of the net system model is guaranteed, but some parts of it may not work at all.
3) *reversibility*, characterising recoverability of the initial marking from any reachable marking.
4) *mutual exclusion*, dealing with the impossibility of simultaneous *submarkings* (p-mutex) or *firing concurrency* (t-mutex).

The proposition of algorithms and methods to detect home states in CPNs is still an open problem. However direct graphs can also be used to spot loops, which are essential (necessary condition) to reversibility.

Definition 9.17. Let M_{home} be a marking and M^*_{home} a set of markings.

1. M_{home} is a **home marking** if and only if

$$\forall M \in \mathscr{R}(M_0) : M_{home} \in \mathscr{R}(M)$$

2. M^*_{home} is a **home space** if and only if

$$\forall M \in \mathscr{R}(M_0)\ \exists M' \in \mathscr{R}(M) : M' \in M^*_{home}$$

3. A predicate ϕ on markings is a **home predicate** if and only if

$$\forall M \in \mathscr{R}(M_0)\ \exists M' \in \mathscr{R}(M) : \phi(M')$$

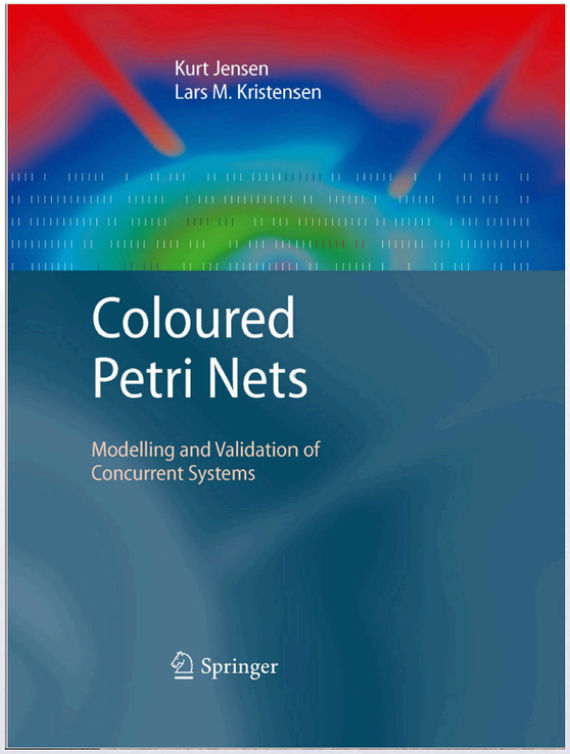

Proposition 9.7. *Let $SS = (N_{SS}, A_{SS})$ be the state space of a Coloured Petri Net CPN and let $M_1 \in \mathscr{R}(M_0)$. Then the following holds:*

1. $M_1 \xrightarrow{be_1} M_2 \xrightarrow{be_2} M_3 \cdots M_k \xrightarrow{be_k} M_{k+1}$ *is a finite occurrence sequence of CPN if and only if* $M_1\,(M_1, be_1, M_2)\,M_2\,(M_2, be_2, M_3)\,M_3 \cdots M_k\,(M_k, be_i, M_{k+1})\,M_{k+1}$ *is a finite directed path in SS.*
2. $M_1 \xrightarrow{be_1} M_2 \xrightarrow{be_2} M_3 \cdots$ *is an infinite occurrence sequence of CPN if and only if* $M_1\,(M_1, be_1, M_2)\,M_2\,(M_2, be_2, M_3)\,M_3 \cdots$ *is a infinite directed path in SS.*

□

pace.
le markings. *Deadlock-*
e activity (i.e. fireabil-
ne parts of it may not

tial marking from any

simultaneous *submark-*

A colored net is said reversible if for any state M belonging to the forward case class of the initial state M_0 there is an occurrence sequence leading back to M_0.

PN Basic Properties

1) *boundedness*, characterising finiteness of the state space.
2) *liveness*, related to potential fireability in all reachable markings. *Deadlock-freeness* is a weaker condition in which global infinite activity (i.e. fireability) of the net system model is guaranteed, but some parts of it may not work at all.
3) *reversibility*, characterising recoverability of the initial marking from any reachable marking.
4) *mutual exclusion*, dealing with the impossibility of simultaneous *submarkings* (p-mutex) or *firing concurrency* (t-mutex).

We should now investigate how to do this basic analyses in both classic and colored nets

1) *boundedness*, characterising finiteness of the state space.
2) *liveness*, related to potential fireability in all reachable markings. *Deadlock-freeness* is a weaker condition in which global infinite activity (i.e. fireability) of the net system model is guaranteed, but some parts of it may not work at all.
3) *reversibility*, characterising recoverability of the initial marking from any reachable marking.
4) *mutual exclusion*, dealing with the impossibility of simultaneous *submarkings* (p-mutex) or *firing concurrency* (t-mutex).

A Petri net (N, M_0) is said to be *persistent* if, for any two enabled transitions, the firing of one transition will not disable the other. A transition in a persistent net, once it is enabled, will stay enabled until it fires.

Petri Nets: Properties, Analysis and Applications

TADAO MURATA, FELLOW, IEEE

Configurações especiais

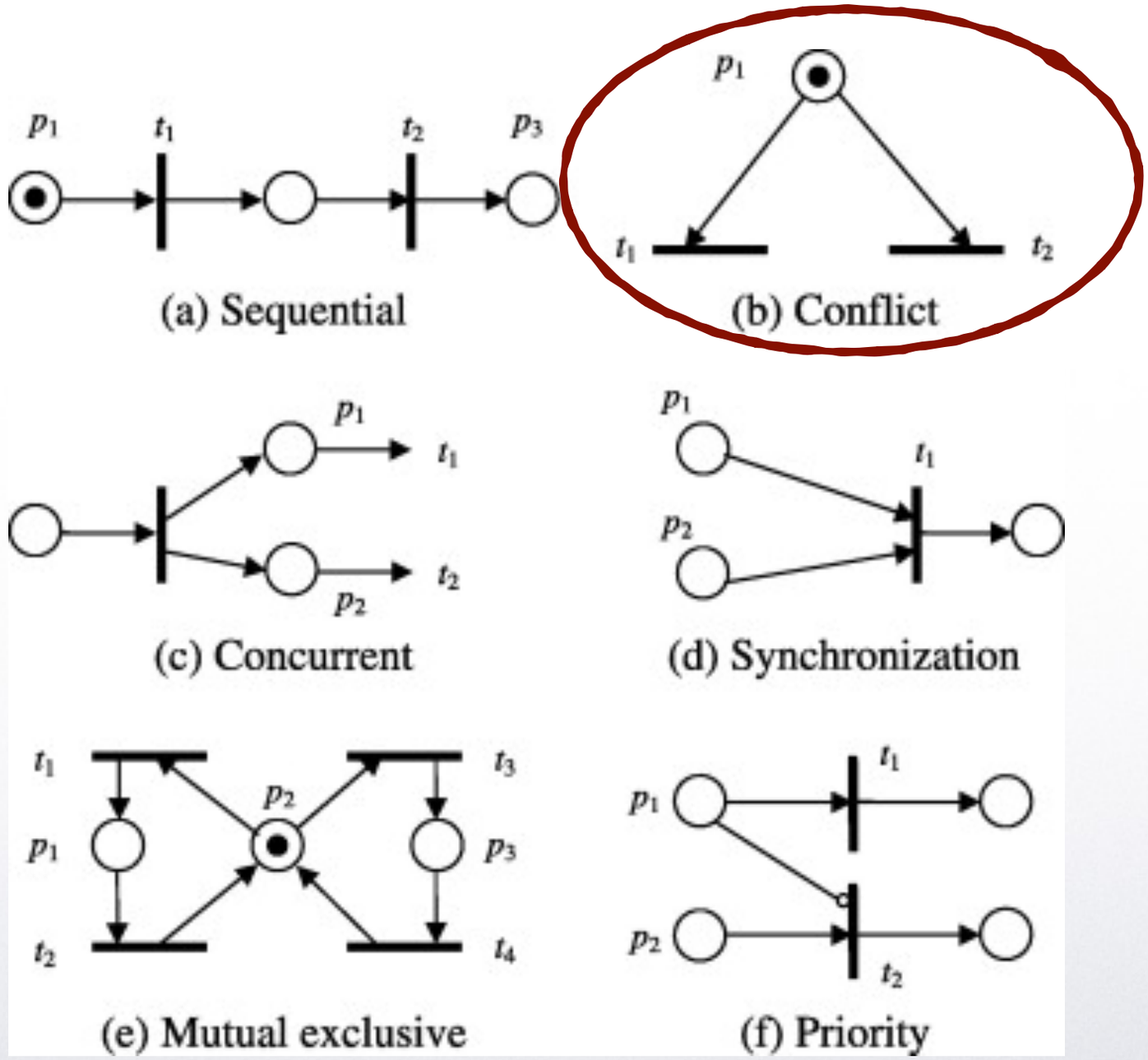

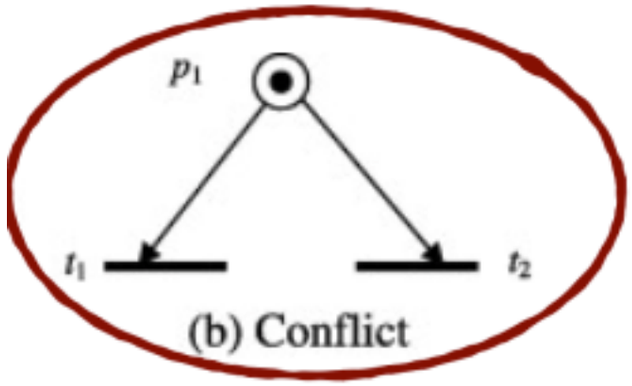

(b) Conflict

Como vimos na lista de exercícios, se admitirmos que ambas as transições t_1 e t_2 estão habilitadas, e usarmos a equação de estado para determinar o resultado da ocorrência, teremos uma marcação com um termo negativo.

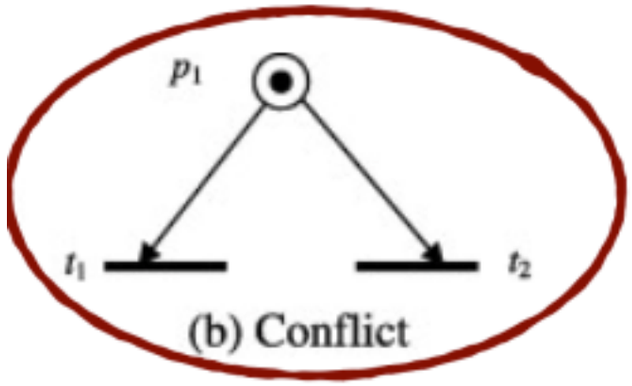

(b) Conflict

Portanto, em uma situação de conflito, somente uma das transições poderá ocorrer criando uma situação chamada de exclusão mútua ou mutex.

Semáforo: o mutex clássico

Em uma situação genérica a mútua exclusão (mutex) é caracterizada por processos Itransições independentes que compartilham pelo menos um lugar. O inicio de um processo desabilita este lugar e faz com que o outro seja desativado.

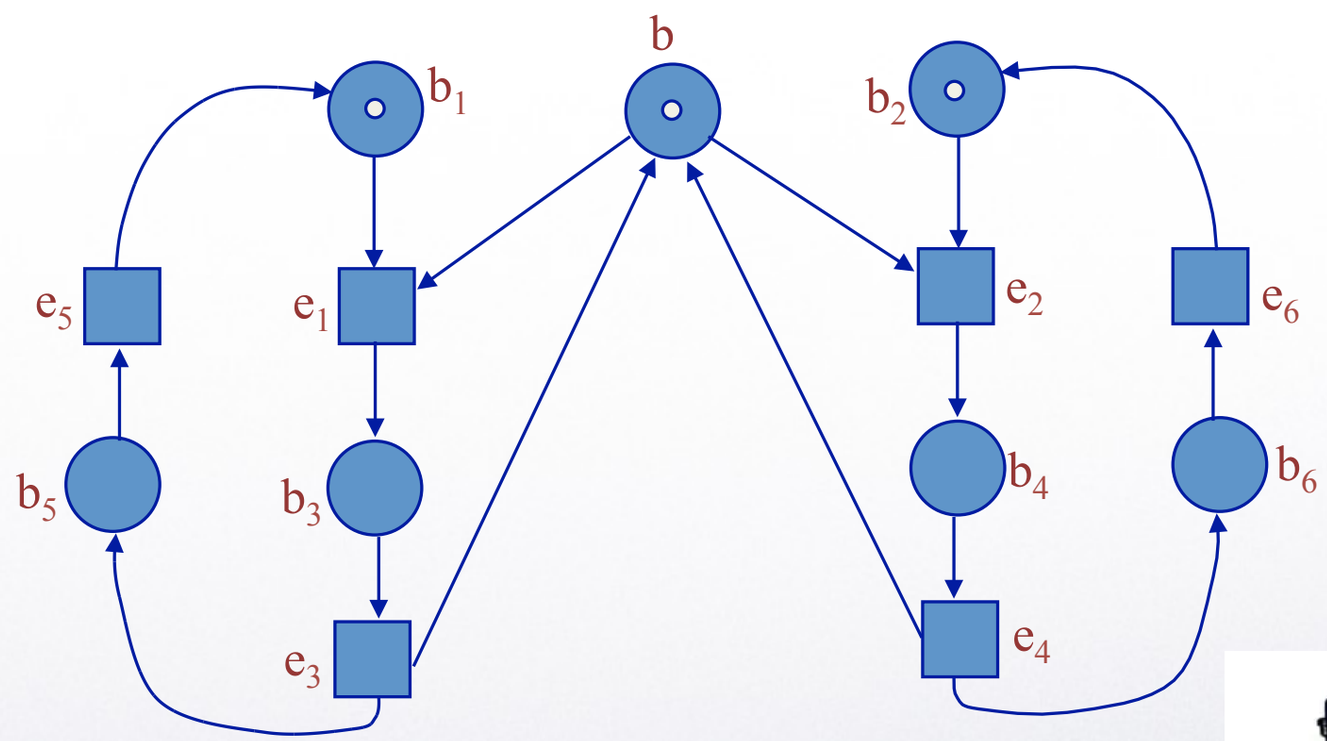

O exemplo dos filósofos

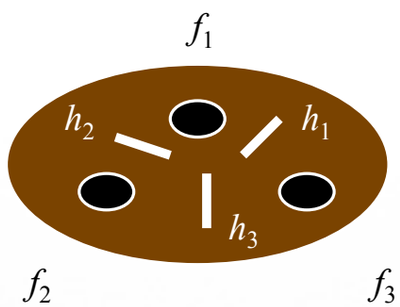

P={p_1, p_2, p_3}
H={h_1, h_2, h_3}
U=P ∪ H

l : P → H
$p_i \rightarrow h_i$
r : P → H
$p_1 \rightarrow h_2$
$p_2 \rightarrow h_3$
$p_3 \rightarrow h_1$

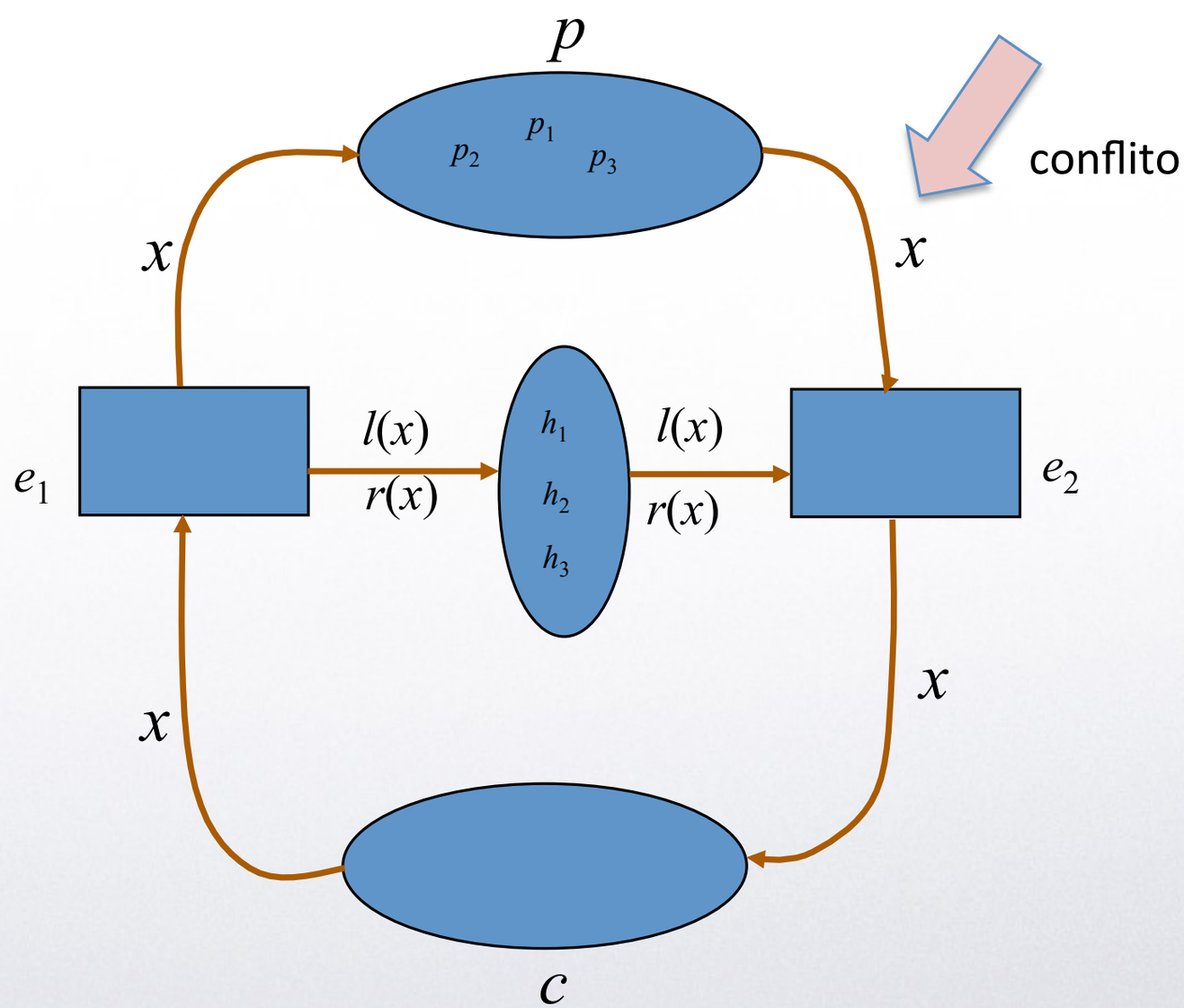

O exemplo dos filósofos

P={p_1, p_2, p_3}
H={h_1, h_2, h_3}
U=P ∪ H

l : P → H
$p_i \rightarrow h_i$
r : P → H
$p_1 \rightarrow h_2$
$p_2 \rightarrow h_3$
$p_3 \rightarrow h_1$
w: P → I
$p_j \rightarrow$ j=(i)mod 3+1

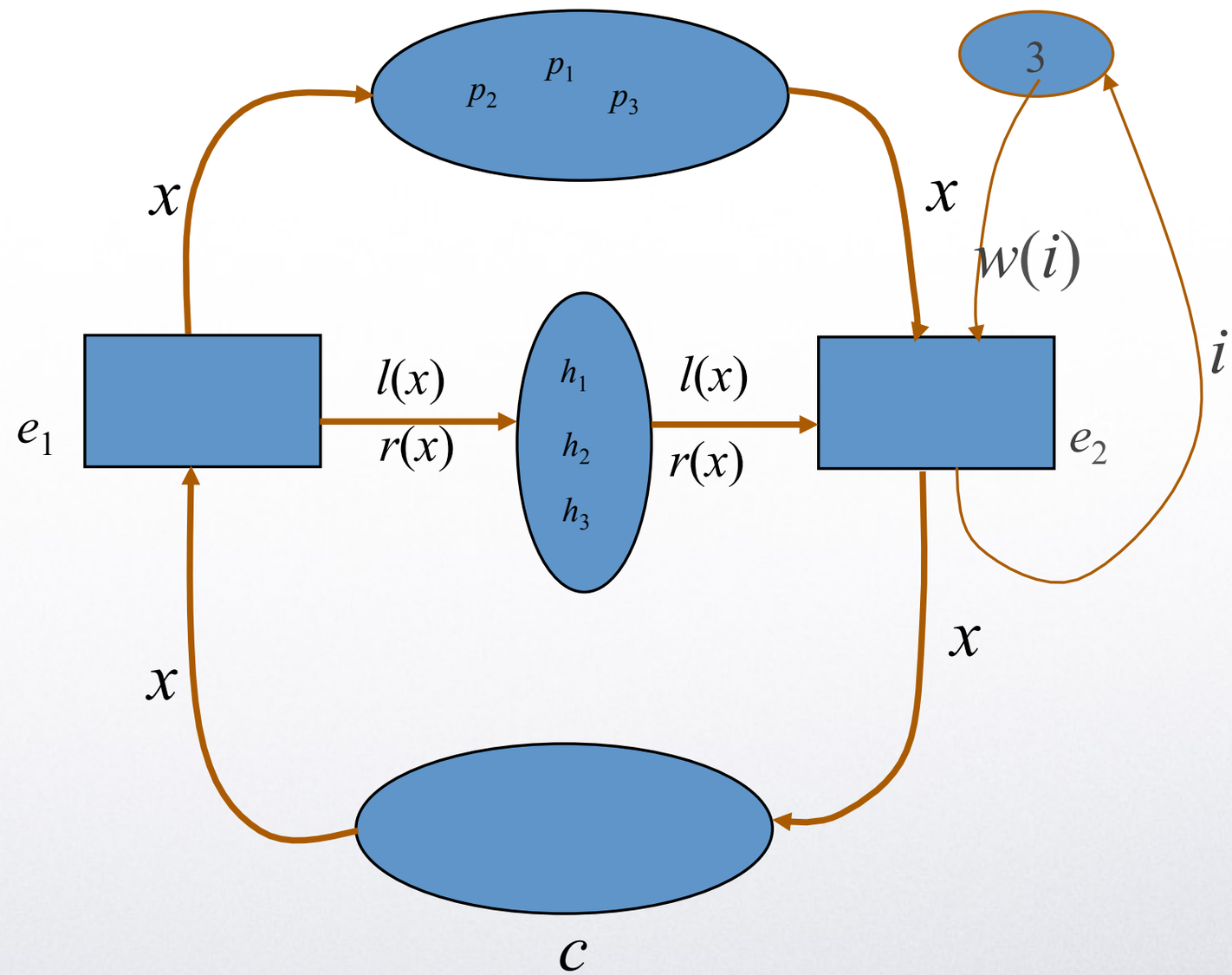

1) *boundedness*, characterising finiteness of the state space.
2) *liveness*, related to potential fireability in all reachable markings. *Deadlock-freeness* is a weaker condition in which global infinite activity (i.e. fireability) of the net system model is guaranteed, but some parts of it may not work at all.
3) *reversibility*, characterising recoverability of the initial marking from any reachable marking.
4) *mutual exclusion*, dealing with the impossibility of simultaneous *submarkings* (p-mutex) or *firing concurrency* (t-mutex).

Petri nets as a "language"

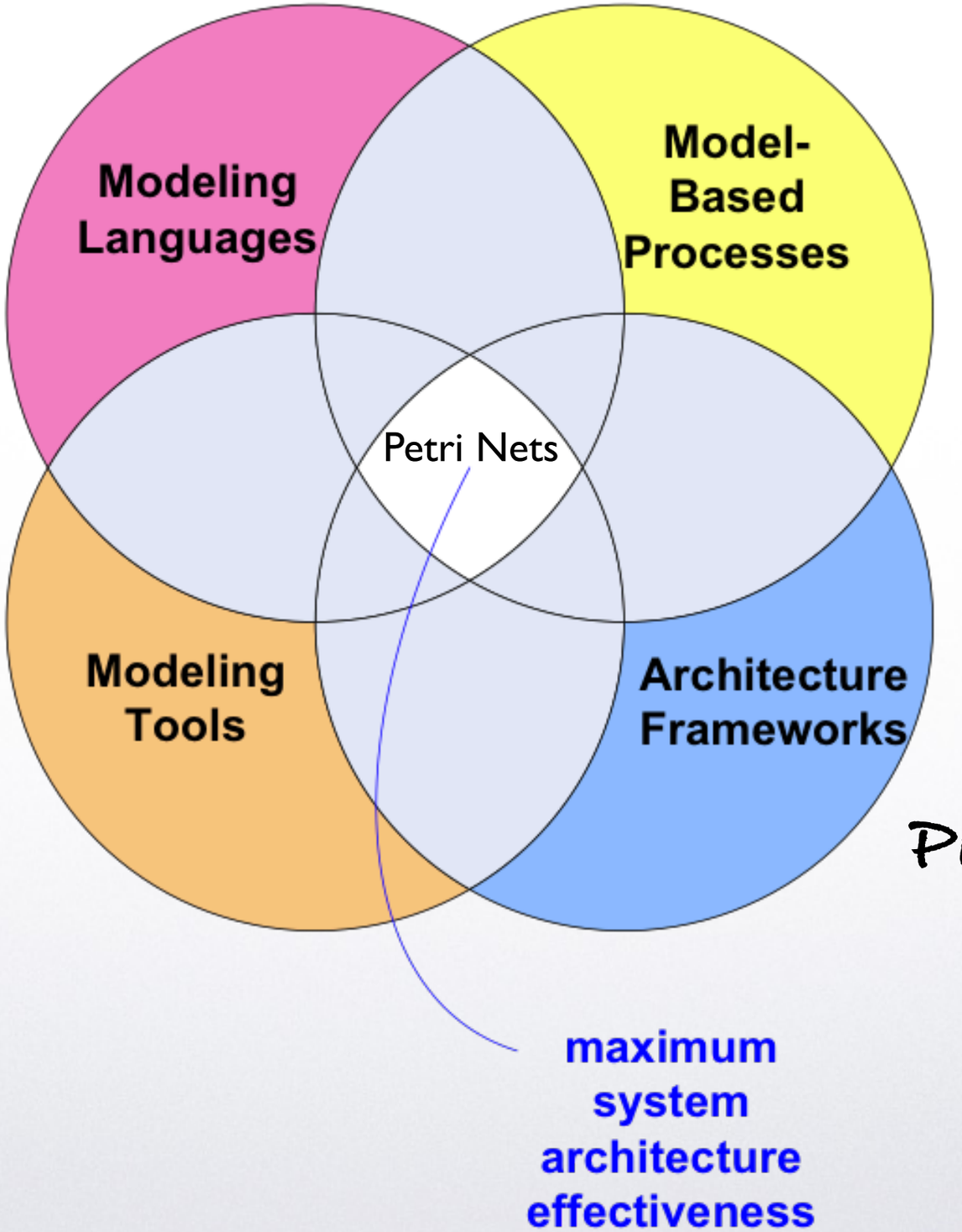

Petri nets as a modeling approach

NEC \Orchestrating a brighter world

Special Issue on Future Cloud Platforms for ICT Systems | Future technology for NEC's C&C cloud platforms

Big Data Analytics in the Cloud
- System Invariant Analysis Technology Pierces the Anomaly -

KATO Kiyoshi, MIYAZAKI Hiroyuki, SOMA Tomoya, TAKAGI Mayumi

Abstract

The system invariant analysis technology automatically creates behavior models from various systems by extracting the relationships which are invariant in normal system operation. It enables the early detection of a system's anomaly behavior. It helps to improve availability of information and communication technology (ICT) systems such as the cloud computing systems. Moreover, it also helps to optimize the maintenance cost by enabling failure prediction of electric power plants, structural health monitoring of bridges, etc. and improves safety and reliability of the systems performing as social infrastructures. This paper outlines the system as a big data analysis technology and considers analysis applications in the cloud.

Keywords: System invariant analysis technology, big data, cloud computing, failure prediction, machine learning

1. Introduction | 2. System Invariant Analysis Technology

Products & Solutions | Case Studies | News | About NEC

Home > Products & Solutions > Reliable AI maximizes human power —NEC the WISE— > Cutting-edge AI technology lineup, NEC the WISE, accelerating digital transformation > System Invariant Analysis Technology

System Invariant Analysis Technology

Top | Use Cases | Rich Technology Lineup | Responsible AI | Human Resources for AI | Case Studies | Products & Services | Press Releases

Automatic modeling of correlations between sensors to enable early detection of anomalies

This technology automatically extracts and creates invariant relationships that represent the characteristics of facilities or systems based on massive quantities of sensor data. By comparing the values predicted by the invariant model with real-time data. "not usual" behaviors can be detected.

Hindawi | Journals | Publish with us | Publishing partnerships | About us | Blog

Journal of Function Spaces

Journal overview | For authors | For reviewers | For editors | Table of Contents | Special Issues

Journal of Function Spaces / 2021 / **Article**

On this page
- Abstract
- Introduction
- Conclusion
- Data Availability
- Conflicts of Interest
- References
- Copyright

Research Article | Open Access
Volume 2021 | Article ID 2490392 | https://doi.org/10.1155/2021/2490392

Show citation

Invariant Analysis, Analytical Solutions, and Conservation Laws for Two-Dimensional Time Fractional Fokker-Planck Equation

Nisrine Maarouf[1] and Khalid Hilal[1]
Show more

Academic Editor: Andrea Scapellato

Received	Accepted	Published
10 Apr 2021	24 May 2021	01 Jun 2021

Abstract

The main purpose of this paper is to apply the Lie symmetry analysis method for the two-dimensional time fractional Fokker-Planck (FP) equation in the sense of Riemann–Liouville fractional derivative. The Lie point symmetries are derived to obtain the similarity reductions and explicit solutions of the governing equation. By using the new

PDF | Download Citation | Download other formats | Order printed copies

Views 187 | Citations 0 | Downloads 201

Related articles

Invariant Calculus was developed since the middle of the lats century by several authors, but Manuel Silva authored the principal papers in Petri nets invariant analysis. The problem consists in solving an homogeneous system of equations

$$y \, . \, C = 0$$

$$C \, . \, x = 0$$

Na próxima aula vamos discutir propriedades importante para o processo de modelagem e análise de sistemas como Fairness, B-Fairness, e invariantes.

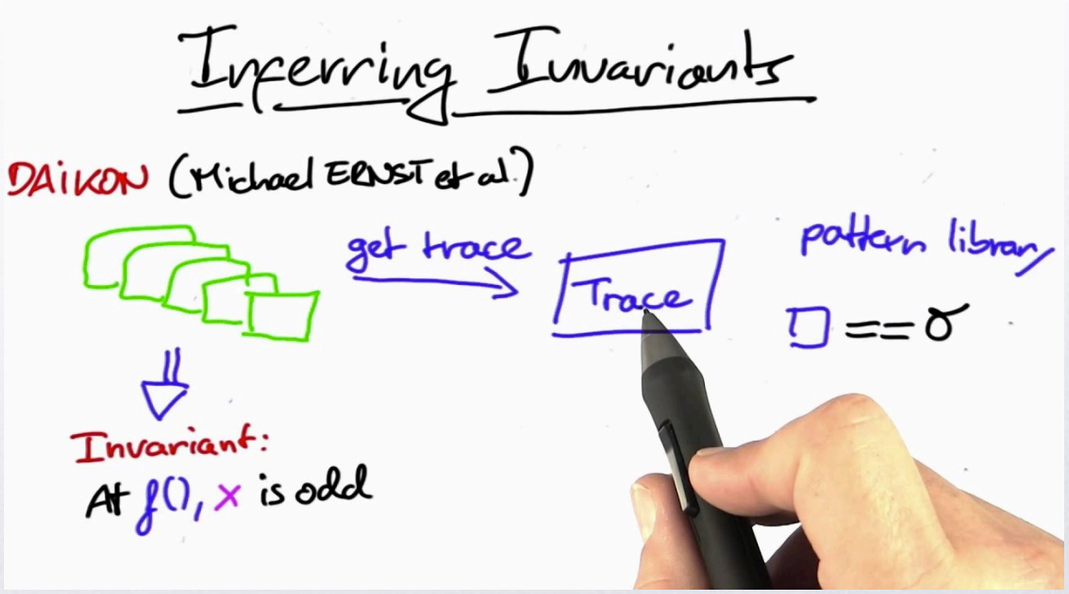

Sobre o artigo final:

Teremos que focar no artigo final porque estamos a 35 dias do final do curso. Portanto na próxima aula teremos mais um milestone, onde agora vocês devem apresentar além do título, abstract, palavras-chave, uma introdução e uma seção de "background", além de bibliografia.