Syst. Biol. 42(3):231-246, 1993

SYSTEMATIC GENERALIZATION, HISTORICAL FATE, AND THE SPECIES PROBLEM

ROBERT J. O'HARA[1]

Department of Philosophy and The Zoological Museum, University of Wisconsin, Madison, Wisconsin 53706, USA

Abstract.—The species problem is one of the oldest controversies in natural history. Its persistence suggests that it is something more than a problem of fact or definition. Considerable light is shed on the species problem when it is viewed as a problem in the representation of the natural system (sensu Griffiths, 1974, Acta Biotheor. 23:85-131; de Queiroz, 1988, Philos. Sci. 55:238-259). Just as maps are representations of the earth and are subject to what is called cartographic generalization, so diagrams of the natural system (evolutionary trees) are representations of the evolutionary chronicle and are subject to a temporal version of cartographic generalization, which may be termed systematic generalization. Cartographic generalization is based on judgements of geographical importance, and systematic generalization is based on judgements of historical importance, judgements expressed in narrative sentences (sensu Danto, 1985, Narration and knowledge, Columbia Univ. Press, New York). At higher systematic levels, these narrative sentences are conventional and retrospective, but near the species level they become prospective, that is, dependent upon expectations of the future. The truth of prospective narrative sentences is logically indeterminable in the present, and since all the common species concepts depend upon prospective narration, it is impossible for any of them to be applied with precision. [Future contingents; generalization; maps; natural system; phylogeny; representation; species; trees.]

Fifty years after the publication of *The Origin of Species* (Darwin, 1859), the philosopher John Dewey tried to assess the impact of evolution on his discipline. The traditional pre-Darwinian views of nature, he wrote, views that had been ascendant in philosophy for 2,000 years and had become "the familiar furniture of the mind, rested on the assumption of the superiority of the fixed and final; they rested on treating change and origin as signs of defect and unreality." Into this stable framework, Darwin "introduced a mode of thinking that was bound to transform the logic of knowledge" (Dewey, 1910:1-2). But Dewey recognized that this transformation was far from complete even in his day, half a hundred years after the *Origin* had first appeared.

> Old ideas give way slowly, for they are more than abstract logical forms and categories. They are habits, predispositions, deeply engrained attitudes of aversion and preference. Moreover, the conviction persists—though history shows it to be a hallucination—that all the questions that the human mind has asked are questions that can be answered in terms of the alternatives that the questions themselves present. But in fact intellectual progress usually occurs through sheer abandonment of questions together with both of the alternatives they assume—an abandonment that results from their decreasing vitality and a change of urgent interest. We do not solve them: we get over them. Old questions are solved by disappearing, evaporating, while new questions corresponding to the changed attitude of endeavor and preference take their place. (Dewey, 1910:19)

One of the oldest questions in natural history, old even in Darwin's day, is the question, "What is a species?" The species problem has never once dropped from sight in the long history of systematics, and in recent years the development of cladistic analysis has given it a particular new vitality (Wiley, 1978; Mishler and Donoghue, 1982; Cracraft, 1983; de Queiroz and Donoghue, 1988, 1990a, 1990b; Nelson, 1989; Wheeler and Nixon, 1990; Ereshefsky, 1991; Baum, 1992). In addition to new species concepts rooted in the ideas of cladistics, other new concepts have been recently proposed, concepts based on behavioral (Paterson, 1985) and ecological (Ehrlich and Raven, 1969; Van Valen, 1976)

[1] Present address: Center for Critical Inquiry in the Liberal Arts, University of North Carolina at Greensboro, Greensboro, North Carolina 27412-5001, USA.

criteria, and all of these seem to be in some way at odds with each other and with their predecessors.

The very intractability of the species problem might suggest to us, however, that there is something here that is deeply amiss, something that may not lie in our answers to the question, "What is a species?" but in the very question itself. Perhaps the species problem is not something that needs to be solved, but rather something that, in Dewey's phrase, needs to be gotten over. There are indications that some systematists are beginning to look upon the species problem in this way. Mishler and Donoghue (1982), for example, suggested that no one species concept is applicable across all taxa, and that to search for one is futile. Systematists, they argued, should adopt a pluralistic approach. In a similar vein, de Queiroz and Donoghue (1988) presented not a new species concept, but instead an analysis of the interrelations of various species concepts, without advocating any one of them over the others.

In this paper I take a view complementary to that of de Queiroz and Donoghue. I provide here a new perspective on the species problem, one that derives from my previous studies of the historical character of systematics and the history of systematic representation (O'Hara, 1988a, 1988b, 1991a, 1992). This perspective I call *systematic generalization*, and it will allow us to see the species problem not as a problem of fact, but rather as a problem of historical representation. I will argue that by taking up the perspective of systematic generalization we will be better able, not to solve the species problem, but rather to get over it.

My argument will proceed as follows. First, I will reiterate the distinction between systematics and classification (Griffiths, 1974; de Queiroz, 1988) and restate my characterization of systematics as the discipline that estimates and represents the evolutionary chronicle, our current interpretation of the ancient concept of the natural system (O'Hara, 1988b). I do this in order to make it clear that my argument here will not be an argument for the legitimacy of different classifications of natural objects, because it is not an argument about classification at all, but rather about different generalized representations of the single natural system. I will then go on to develop the idea of systematic generalization itself, drawing upon my previous treatment of tree simplification (O'Hara, 1992) and comparing systematic generalization to the well-understood process of cartographic generalization. While cartographic generalization is practiced on representations of the earth, systematic generalization is practiced on representations of evolutionary history, and I will show that, as a consequence, the principles of systematic generalization differ in interesting ways from those of cartographic generalization. Instead of being based on judgements of geographical importance, as in cartographic generalization, decisions about systematic generalization are made according to judgements of historical importance, and these judgements are embodied in narrative predicates (Danto, 1968, 1985; O'Hara, 1988b). In cases where the events being described are temporally remote (as they will ordinarily be for higher taxa), these narrative predicates are conventional and retrospective. As we approach the present, however, and try to describe populations and species that are in the midst of change, our systematic generalizations become based perforce on *prospective* narrative predicates, under which past and present events are described with reference to events that are expected to occur in the future. I will show that prospective narrative predicates underlie the notion of "historical fate" that has figured in Wiley's discussions of the species problem (Wiley, 1978, 1981), as well as Hennig's (1966) notion of tokogeny as something distinct from phylogeny, and even the idea of a population itself. Because all of the commonly advocated species concepts depend upon prospective narration, all of them are necessarily indeterminate in their application to groups of organisms in the present, whether these groups are of interest as "units of evolution" or as units for cladistic analysis.

I will conclude by arguing that this necessary indeterminacy is a function of the level of generalization at which phylogenetic representations normally operate. As long as we do not attribute "irrelevant pretensions" (Toulmin, 1953:115) to these representations—as long as we do not expect more precision from them than they are able to deliver—their indeterminacy should not bother us. If in particular cases we have a genuine practical need for greater chroniclar resolution than is available in existing representations, then the way is always open to provide it. But the idea that we can create a single perfect representation of the evolutionary chronicle made up of elements called species is no more realistic than the idea that we can create a single perfect map of the earth.

Classification versus System

Griffiths (1974), and following him de Queiroz (1988), distinguished between two different kinds of ordering activities, termed classification and systematization. The distinction between these two activities, and between their products—classifications and systems—is an important one, and I want to reiterate it here because getting over the species problem will involve picturing what the object of systematics—the natural system—looks like up close.

Classification is the grouping of objects into classes on the basis of the properties of the objects being classified. The objects in each group are spoken of as being members or instances of their class. In contrast, systematization is the arrangement of objects into some larger whole object, and the relation that the constituent objects bear to the systematic whole is that of a connected part rather than a member (cf. Ghiselin, 1987).

Although the distinction between classifications and systems has attracted attention only recently, if we survey the history of systematics we find it made over and over again by a variety of authors, albeit with varying degrees of clarity. Those systematists who have not internalized the distinction in the present may have difficulty seeing it in the past, but there can be no question that it has been present in the minds of theoretically inclined systematists for many years. In the older literature the term "arrangement" is often used in place of system, and arrangement and system are contrasted with classification or "division." Thus with respect to the distinct concepts of arrangement and division, Macleay was at pains to show his readers "how far they are from being, as some naturalists think, synonymous" (Macleay, 1819–1821:179). In a similar vein, Wallace (1856) lamented the difficulty of making a classification of the passerine birds because so many of the apparent groups grade into one another (O'Hara, 1987). In such a situation, he said, "an *arrangement* may be possible, but a *classification* may not be so. We must therefore give up altogether the principle of *division*, and employ that of *agglutination* or juxtaposition" (Wallace, 1856:195, emphasis in original). And Darwin, in what may be an allusion to Wallace's earlier work, made the contrast between classification and arrangement in order to express his belief that "the *arrangement* of the groups within each class, in due subordination and relation to the other groups, must be strictly genealogical to be natural" (Darwin, 1859: 420, emphasis in original), but that a classification need not strictly reflect genealogical arrangement. A consequence of this, he said, is that a classification of taxa in the present may need to be revised in the future if the taxa undergo further divergence and extinction. "Nevertheless their genealogical *arrangement* remains strictly true, not only at the present time, but at each successive period of descent" (Darwin, 1859:421, emphasis in original). It is significant to note that those authors who distinguished between classifications and systems often represented the results of their *systematic* investigations in diagrams rather than in hierarchical lists of names (O'Hara, 1988a, 1991a; the classification/systematization distinction was not entirely clear to me in the first of these papers).

If systematics is the study of the natural system, how are we to understand the concept of "the natural system" today? I ar-

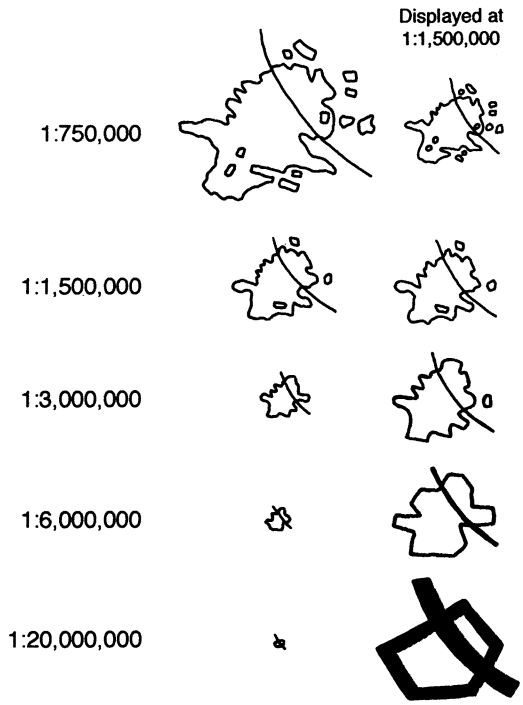

FIGURE 1. Cartographic generalization illustrated by the outline of the city of Vienna at various scales (after Töpfer and Pillewizer, 1966:15).

gued previously (O'Hara, 1988b) that the natural system today should be conceived of as the evolutionary chronicle, the sequence of events in the evolutionary history of life. The totality of the natural system, the complete account of all the events of the evolutionary past, may be referred to as the Ideal Evolutionary Chronicle (after the Ideal Chronicle of Danto, 1985), and the evolutionary trees drawn by systematists today are representations of that Ideal Evolutionary Chronicle, that large particular object, the natural system.

CARTOGRAPHIC GENERALIZATION

The Earth, like the natural system, is also a large particular object, and creating representations of the large particular object called the Earth is the task of cartography. As anyone who reflects upon the nature of cartography will see, no map can represent all of the objects and features that exist in the region it portrays; any map that endeavored to do so, like the map in Lewis Carroll's *Sylvie and Bruno Concluded,* would be useless.

> "We very soon got six *yards* to the mile. Then we tried a *hundred* yards to the mile. And then came the grandest idea of all! We actually made a map of the country, on the scale of *a mile to the mile!*"
>
> "Have you used it much?" I enquired.
>
> "It has never been spread out, yet," said Mein Herr: the farmers objected: they said it would cover the whole country, and shut out the sunlight! So now we use the country itself, as its own map, and I assure you it does nearly as well." (Carroll, 1893: 169, emphasis in original)

Every real map is a simplification of the world, and the process of simplification, from the Earth to a map, and especially from a complex map to a simpler version of the same map, is called *cartographic generalization* (Töpfer and Pillewizer, 1966; Robinson and Petchenik, 1976; Bertin, 1983; Robinson et al., 1984; Buttenfield and McMaster, 1991).

In the simplest case, cartographic generalization involves nothing more than the wholesale deletion of objects as the scale of a map gets smaller. In an atlas of the eastern Adriatic, Töpfer and Pillewizer (1966:13) counted 102 islands on the 1:2,500,000 sheet, 62 on the 1:5,000,000 sheet, 21 on the 1:10,000,000 sheet, 12 on the 1:20,000,000 sheet, and only 7 islands on the 1:50,000,000 sheet. But generalization also involves changes that are more subtle than wholesale object deletion. For example, an object with an irregular outline may be generalized by having the points (called control points) that determine its shape deleted selectively. In this way a sprawling city may be reduced to a simple polygon (Fig. 1). Extended linear objects, such as road or river systems, may be generalized through a similar selective deletion of control points and may in addition have certain of their branches pruned off entirely (Fig. 2).

Given these considerations, it is clear that many different generalizations can be made from a single source map. If this is the case, how does a cartographer choose among the alternative generalizations in practice? In retaining and discarding map elements during generalization and in simplifying

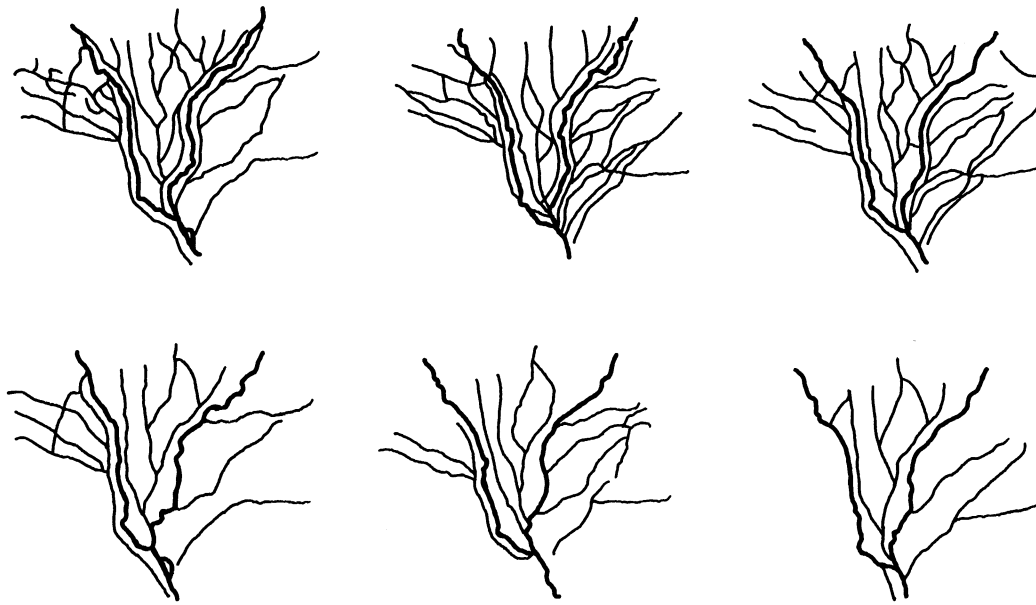

FIGURE 2. A variety of generalizations of the Nile delta (after Töpfer and Pillewizer, 1966:14, fig. 3).

the contours of some objects while preserving those of others, the concern of the cartographer is always a pragmatic one: the use to which the generalized map will be put. A map intended to show truck drivers the expeditious routes through a major city may safely omit the details of the subway system running underneath that city, but a map to be used by tourists on foot had best include such details. The various generalizations of the Nile delta shown in Figure 2 might likewise be designed for different uses, one to show branches navigable by ships with 1-m drafts, another for ships with 2-m drafts, and so on. The use to which a generalized map will be put need not be wholly serious, of course. There is a popular series of postcard maps of the United States, each of which shows about 100 cities, a suitable number given the size and scale of these maps, but the cities shown include the likes of Athens (Louisiana), Cologne (Virginia), Munich (North Dakota), Paris (Texas), Florence (Arizona), Perth (Nevada), and London (Oregon). The "use" of this particular generalization is to amuse the reader of the map.

The complexity and pragmatic character of the generalization process have become particularly apparent in recent years as cartographers have tried to develop generalization rules that can be applied automatically by computers. Such a set of rules, when applied to a large geographical data base, would allow a computer to mimic the traditional practice of the human cartographer and to construct a generalized map of any scale for any given region. The development of such rules might appear to be simple. We could say, for example, that our generalized map will include only highways with four or more lanes or only those cities that have a population of 100,000 or more; in simplifying the outlines of irregular objects we might elect to delete, say, every third control point. But a map resulting from the application of such rigid rules might be far from our expectation and might be unable, as a consequence, to serve our purposes.

> A simplification of cities on a map of the United States which included only those of more than 100,000 inhabitants would eliminate many in the western United States that are far more "important" in their regions than many of those that would have been included in the more populous eastern United States. (Robinson et al., 1984:129)

These examples illustrate an important

fact about generalized maps and their relation to the world, and how the relation of maps to the world differs from the relation we might be inclined to think obtains between scientific hypotheses and the world. Scientific hypotheses, we might suppose, are statements about the world that are either true or false, and their truth or falsehood can be established by means of observations. But the ordinary relation of a map to the world is very different from this. If I am riding on a subway train, and I look at my city map to find out what the next stop will be, only to discover that the map shows streets only and no subway lines, I may be frustrated and declare the map useless, but in such a circumstance I would be unlikely to call it false. There are ways in which a map can be false, of course, by showing a street that simply does not exist, for example; but an ordinary map, one without such outright errors, is not so much a true or false hypothesis about the world as it is a representation of the world by means of which we can answer certain questions and, by implication, not answer other questions (Toulmin, 1953). This type of relation to the world—the relation of maps more or less able to answer certain questions, rather than the relation of hypotheses that are true or false—will be important as we look at the systematic equivalent of cartographic generalization.

Systematic Generalization

In the 18th and 19th centuries, the natural system was often compared to a map (Stevens, 1984; Barsanti, 1988; O'Hara, 1988a, 1991a), and its reconstruction was sometimes compared to surveying. Both systematics and mapmaking, said Strickland,

> must be pursued in the same way, viz. by a careful induction of facts; and it will be found that there is much analogy between the process here recommended [for discovering the natural system] and that of a geographical survey. (Strickland, 1841: 189)

Even though our representations of the natural system today take the form of trees rather than maps, we nevertheless still use the language of distance to describe systematic relationships ("x and y are very close, and both are far from z"; O'Hara, 1991a), and our representations of the natural system are still subject to a kind of systematic generalization that is very much like cartographic generalization. I will consider the nature of systematic generalization at higher levels first and then go on to examine the problems of systematic generalization at the "species" level, where the situation is more complex.

Generalization at Higher Levels

A map is a representation of the surface of the earth, and we generalize maps by selectively deleting objects, both whole objects and control points. An evolutionary tree is a representation of history (O'Hara, 1988b, 1991a), and we generalize historical representations by selectively deleting events. And just as any map can be generalized in a variety of ways, so too can an evolutionary tree, by the selective deletion of different sets of events. The hypothetical phylogeny shown in Figure 3a, for example, could be generalized by omitting all events above nodes 8–15; this would yield the simplified tree shown in Figure 3b. Alternatively, one could omit a different set of events and produce the generalization shown in Figure 3c. The omission of yet another set of events would yield the generalization shown in Figure 3d. It is worth noting that all of these different generalizations are compatible; they do not contradict one another, but rather emphasize through inclusion different sets of events.

The complete chronicle of evolution is of course made up of an enormous number of events, and if we want to represent the entire course of evolution, in a textbook or a museum exhibit, say, then we must substantially generalize the totality of our knowledge in order to produce a representation that will fit the space available to us. A one-page tree of life in a biology textbook is no more likely to show all the details of pycnogonid phylogeny than a one-page map of the world is to show the streets of Madison, Wisconsin. In an earlier paper I discussed the nature of such simplified evolutionary trees and argued that

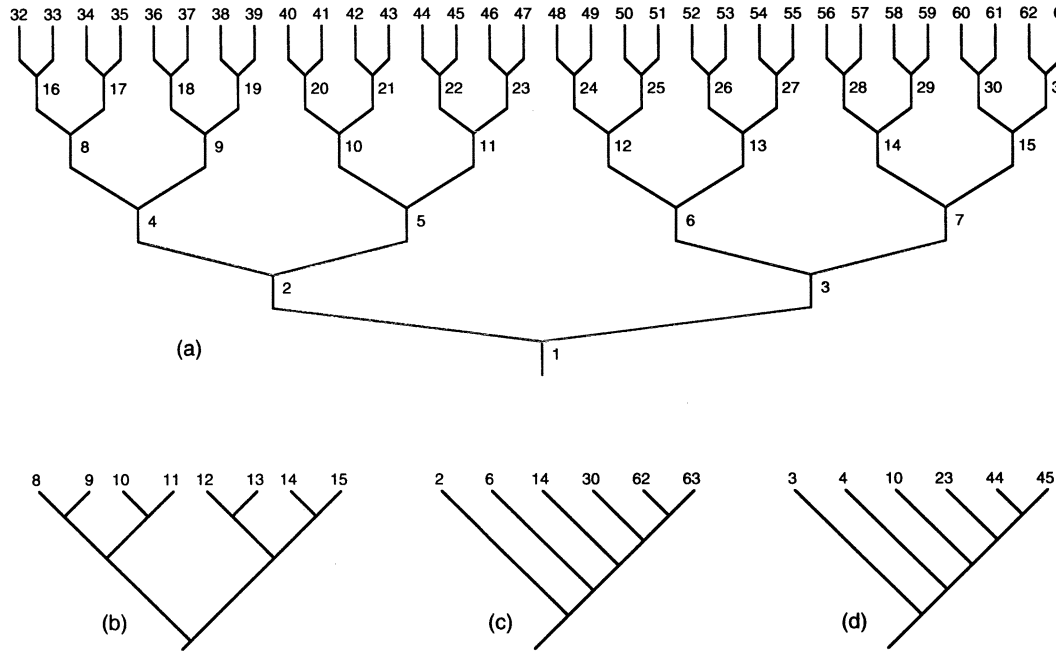

FIGURE 3. Systematic generalization at higher levels (from O'Hara, 1992: fig. 5). A relatively ungeneralized phylogenetic tree (a), and three different generalizations of that tree (b–d).

they have traditionally given greater attention to those events that, when seen in retrospect, appear to have been important in the history of human evolution (O'Hara, 1992; cf. de Queiroz, 1988:252). This differential attention is manifest in the pattern of ranking exhibited by traditional (i.e., noncladistic) classifications of organisms—classifications deeply rooted in "naive" perceptions of natural diversity (Atran, 1990)—and it has tended to support a progressivist view of evolutionary history. It is important to realize, however, that systematic generalization is not restricted to textbook diagrams of the whole course of evolution. Whenever we collapse particular branches on a tree in order to show a summary view, as in Figure 4, we are performing an act of systematic generalization. And since no tree shows all the details of phylogeny, every tree is a selection from and a generalization of the totality of the events in the evolutionary past, just as every map is a generalization of the surface of the earth.

Generalization at Lower Levels: Narrative Predication and Historical Fate

The characterization of systematic generalization that I have just given would exhaust the topic if all organismal reproduction were uniparental, because under such conditions the evolutionary chronicle would be thoroughly branching down to the level of individual organisms: it would be "clades all the way down" (de Queiroz and Donoghue, 1988:326). If we use the term *clan* to refer to an individual organism and all of its descendants, then under uniparental reproduction clades and clans are identical. In most organisms, however, reproduction is biparental rather than uniparental, and new problems of systematic generalization arise in connection with the reticulate chronicle generated by biparental reproduction. Hennig's discussion of tokogeny and phylogeny (Hennig, 1966: 29–32) will serve as a convenient starting point for an examination of these problems.

In his outline of the principles of sys-

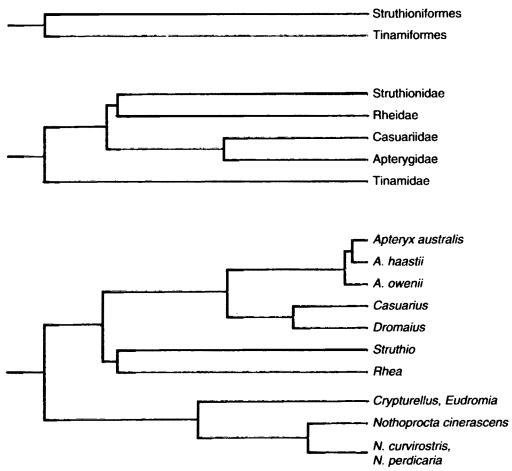

FIGURE 4. Three alternate generalizations of the clade of the ratite birds (after Sibley and Ahlquist, 1990:838–839, 842; but see O'Hara, 1991b, on their accuracy).

tematics, Hennig defined tokogenetic relationships as the "genetic relationships between individuals" (Hennig, 1966:29). "Groups of individuals that are interconnected by tokogenetic relationships" are species, and the "genetic relationships that interconnect species" are phylogenetic relationships (Hennig, 1966:30).

> The structural picture of the phylogenetic relationships differs as much from that of the individual tokogenetic relationships as the latter does from the structural picture of the ontogenetic relationships. In spite of these differences in their structural pictures, the phylogenetic, tokogenetic, and ontogenetic relationships are only portions of a continuous fabric of relationships that interconnect all semaphoronts and groups of semaphoronts. With Zimmermann we will call the totality of these the "hologenetic relationships." (Hennig, 1966:30)

Hennig illustrated these different relationships with the diagram that is reproduced here as Figure 5.

Hennig's text suggests that these different types of relationships are distinct and additive in some sense—that ontogeny plus tokogeny plus phylogeny equals hologeny. But a better understanding of these different kinds of relationships can be obtained by examining Hennig's diagram in the context of systematic generalization. What is shown in Figure 5 is not so much three distinct kinds of relationships as it is the same "fabric of relationships" under three different degrees of generalization. Indeed, the structure of Figure 5 is strikingly cartographic, with a central view and two insets, a lower one magnified to show ontogeny and one at the right reduced to show phylogeny, just as one might produce a map of a city with one inset to show the city center in detail and another to show a more generalized view of the greater metropolitan area.

Hennig's diagram is intended to illustrate basic principles, and as it is drawn the three levels of generalization in it are unproblematic. But let us consider a more complex case (Fig. 6a) where generalization is problematic. How might we generalize Figure 6a into a phylogenetic diagram, like the inset at the right in Figure 5? At first glance we might recognize three branches and produce the generalization shown in Figure 6b. On closer examination, however, we may notice that each of the terminal taxa of Figure 6b can be subdivided further, as shown in Figure 6c. But we can also see that there were gaps in the "fabric of relationships" among the earlier generations that subsequently closed up. Counting generations from the bottom of the diagram and individuals from the left, we see, for example, that individuals 11:2 and 11:3 stand on either side of a reproductive gap that continued for a time but then disappeared after generation 17. In light of this observation, and based on whatever knowledge we may have of the characteristics and geographical distributions of the organisms involved, we might judge the separations between both H and I and also between D and E in this case to be temporary and so choose not to indicate those separations in our generalized diagram (Fig. 6d). Alternatively, we might judge for similar reasons that even the separation between B and C is a temporary situation, and that as a consequence we should recognize only A and J in our generalized diagram (Fig. 6e). A complication enters the picture when we consider individuals 13:7 and 13:8. The mating of these individuals interrupts a long-standing re-

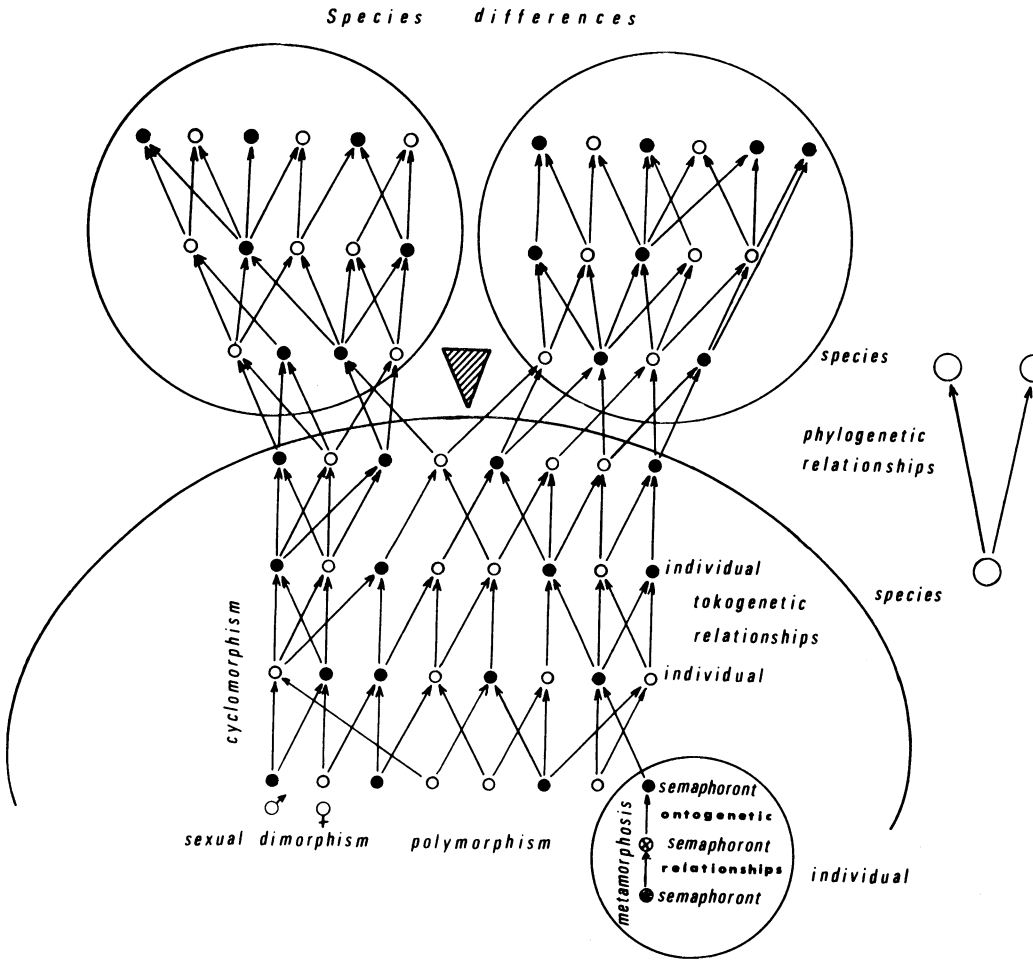

FIGURE 5. Diagram of hologenetic relationships (from Hennig, 1966:31, fig. 6). Although Hennig's text suggests that hologeny is made up of ontogeny, tokogeny, and phylogeny all taken together, this diagram shows that these three types of relationships are really just the same "fabric of relationships" shown under three different levels of generalization. Note the cartographic character of this figure, with a main portion in the center and two insets. (Reproduced with permission of the University of Illinois and R. Zangerl.)

productive gap, which then reappears and continues through subsequent generations. Depending upon how one judges the geographical setting and the organisms involved, this event might be taken as evidence that the reproductive gap between A and B is only temporary, and so this portion of Figure 6a could be generalized into a single branch, K, which is separated from C by a reproductive gap that has been unbroken for 13 generations (Fig. 6f). As a final possibility, our knowledge of the organisms depicted in Figure 6a might lead us to regard all of these reproductive gaps as temporary and so to produce the generalization shown in Figure 6g.

What is the nature of the reasoning just described, the reasoning that leads from Figure 6a to the various alternative generalizations shown in Figures 6b–g? In each of these cases, the operative principle of generalization is some notion of "temporariness." Permanent gaps in the fabric of relationships are regarded as important and are retained in each generalization, whereas gaps judged to be temporary are in each

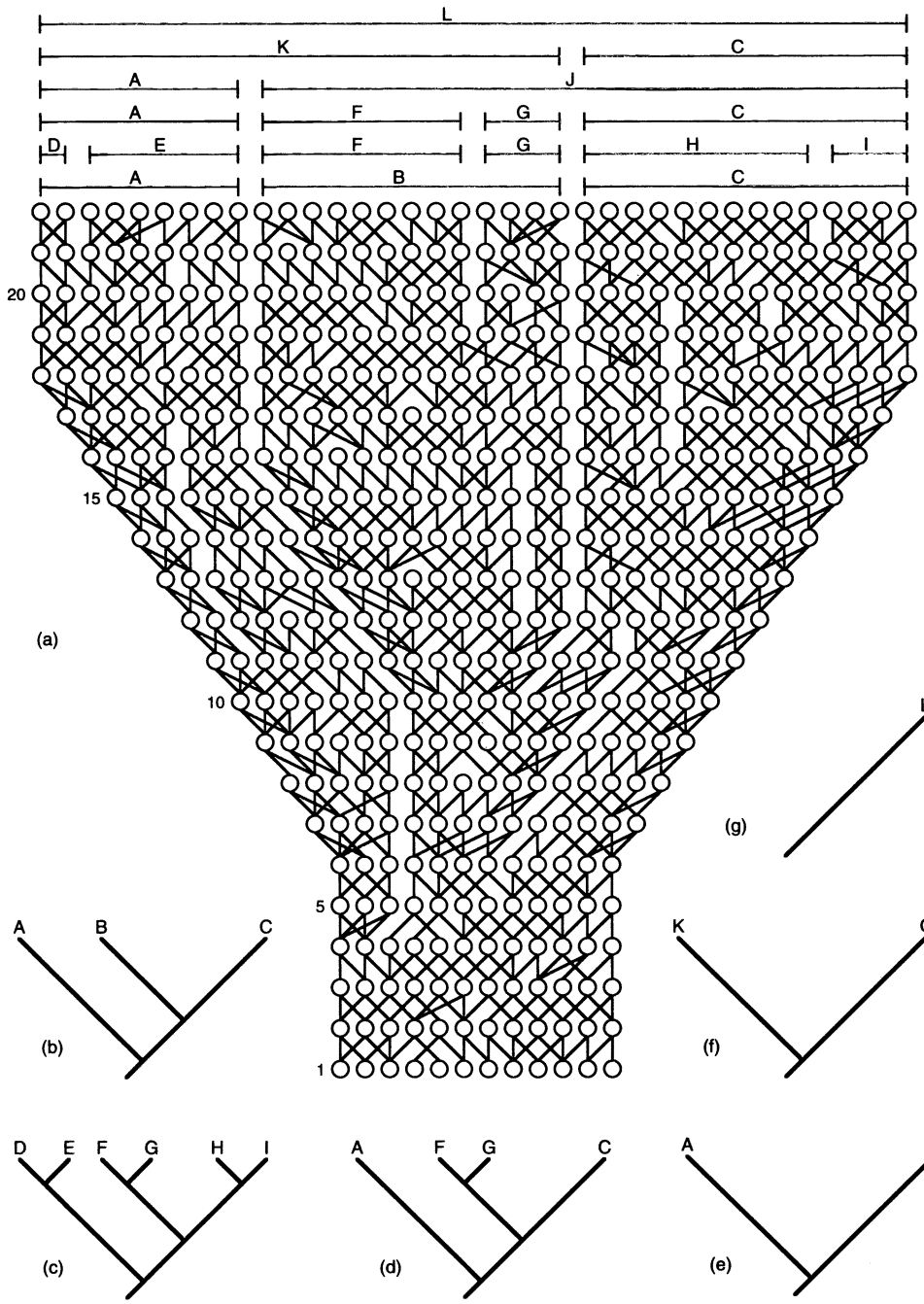

FIGURE 6. A hypothetical evolutionary chronicle (a), and six different generalizations of that chronicle (b–g). Which generalization we prefer will depend upon our judgements of the temporariness or permanence of the various gaps in the "fabric of relationships." Note that generalizations (e) and (f) are incompatible.

case generalized out of existence. Darwin, who implicitly held this view, often referred to species as "permanent varieties" (e.g., Darwin, 1859:475). But what is implied by the claim that a particular gap or separation is either "temporary" or "permanent"? To refer to a particular separation, say, that between H and I in Figure 6a, as a temporary separation is to make a specific claim about the future: it is to say that there will exist in the future individuals that are both descendants of H and also at the same time descendants of I. Such a claim about the future may of course turn out to be false: I may describe the separation between H and I as temporary, but it may in fact turn out to be permanent, and no descendant of H may ever reproduce with any descendant of I. The truth of such claims—claims of temporariness or permanence—is thus determined retrospectively (Sober, 1984:339, 1993; cf. de Queiroz and Donoghue, 1988:330): it "depends very much upon the way the world goes" (Danto, 1985:194). This is how it is possible to create incompatible generalizations, such as those shown in Figures 6e and 6f: the events of Figure 6a can be assembled into composite events in more than one way because the criterion of assembly is contingent upon how things go in the future.

The problem of retrospective determination will be familiar to anyone who has reflected upon the difficulty faced by historians of current events. Danto referred to this difficulty as the problem of narrative predication.

> I may refer to my favorite candidate as our next president, and though she may indeed be that, it will have been false that she was that if she in fact fails to win the election. I shall call such predicates, which are true of objects and events at a given time only if certain objects and events occur at a time future to them and failing which they are retrospectively false, *narrative predicates*. When we apply them to present objects, we are making a *special* claim on the future, different indeed from that made by the use of non-narrative future-referring predicates. (Danto, 1985:349–350, emphasis in original)

Prospective narrative predication—the application of a narrative predicate to an object in the present, as when we refer to someone as the next president or to the separation between two populations as temporary—is characteristic not of "a story told in retrospect, but a story which the narrator is in the midst of" (Rouse, 1990: 184). And the truth or falsehood of prospective narrative sentences is logically indeterminable in the present.

The evolutionary story is something that all of us are in the midst of, so let us consider how these ideas of prospective narration and retrospective determination relate to the species problem. Suppose we wish to choose among the alternative generalizations of Figure 6a and have adopted the evolutionary species concept as defined by Wiley (1978:18, emphasis in original): "*A species is a single lineage of ancestral descendant populations of organisms which maintains its identity from other such lineages and which has its own evolutionary tendencies and historical fate.*" Under this definition could H and I be considered separate species? They could be, if we considered their separation permanent: each would then have a separate historical fate. But if their separation is only temporary, then their fates would not be distinct, and we would have to regard them as a single species under this definition. As we have seen, judgements of temporariness depend upon prospective narration, so unless we know the future, we cannot with certainty answer the question in this case.

Suppose instead of Wiley's evolutionary species concept we chose to adopt the phylogenetic species concept as formulated by Cracraft (1983:170; emphasis in original): "*A species is the smallest diagnosable cluster of individual organisms within which there is a parental pattern of ancestry and descent.*" This species concept makes no explicit reference to "temporariness" or "fate" and so might seem to be free of narrative predication, but if we reflect on the notion of a cluster of individuals "within which there is a parental pattern of ancestry and descent" we can see that it is not. There is a parental pattern of ancestry and descent within H and also within I. Is there such a pattern of ancestry and descent within H and I considered together? At the mo-

ment (generation 22) there does not appear to be, but perhaps in the next generation the gap between these two patterns of ancestry and descent will be erased, as similar gaps in other parts of this tree were erased in earlier generations. Wheeler and Nixon (1990), advocates of the phylogenetic species concept, recognized this difficulty and conceded that "temporary isolation" of individuals within a phylogenetic species does not change the species status of those individuals (1990:78). But this leaves us with the same dilemma that confronted the notion of historical fate in the evolutionary species concept: how do we tell whether the isolation is temporary or not? The phylogenetic species concept attempts to capture Hennig's notion that if phylogenetic relationships obtain among objects then those objects are species, whereas if tokogenetic relationships obtain among the objects then those objects are parts of species. The distinction between tokogeny and phylogeny, however, is a matter of generalization, as Figure 6 shows, and the systematic generalization of present or near-present events depends necessarily upon prospective narration.

Let us consider finally the venerable biological species concept. In his *Animal Species and Evolution,* Mayr (1963:19) quoted two versions of the biological species concept, the first his own and the second Dobzhansky's: "groups of actually or potentially interbreeding natural populations which are reproductively isolated from other such groups" (Mayr, 1940) and "the largest and most inclusive . . . reproductive community of sexual and cross-fertilizing individuals which share a common gene pool" (Dobzhansky, 1950). Other variations on these definitions have appeared from time to time as well (Mayr, 1970, 1982). These definitions of biological species mention explicitly neither patterns of ancestry and descent nor historical fate but instead contain the idea of an "interbreeding population" or a "reproductive community." Are H and I in Figure 6a part of the same interbreeding population, or are they different populations? There is no gene flow between them now, but perhaps there will be in the future: perhaps the absence of gene flow between H and I is only temporary. If so, we might consider them to be members of the same population and hence of the same species. Alternatively, we might believe that these two groups of individuals will never exchange genes again, and that their separation is permanent. In such a case we might consider them to be separate populations and species. Since no population is instantaneously panmictic, our judgement as to what individuals belong to a particular population or reproductive community will always depend to some extent upon our expectation of the future behavior of those individuals and their descendants. In other words, it will depend to some extent upon prospective narration.

All three of these species concepts then—the evolutionary, phylogenetic, and biological—depend upon prospective narration: upon notions of fate, temporariness, and permanence. As a consequence, it is logically impossible for these species concepts to be applied with certainty in the present because they all depend upon the future. Having reached this conclusion, the reader might expect me now to offer a new species definition of my own that avoids the problem of prospective narration, but this I will not do. I do not regard future dependence as a flaw of these species concepts; it is simply an ineliminable characteristic of them, and I consider Wiley's explicit recognition of future dependence, under the name of "historical fate," to be particularly insightful. Rather than offer a new species definition, I will suggest that by seeing the species problem as a problem of historical representation, and by recognizing the limits of representation, we will be better able, not to solve the species problem by means of redefinition, but rather to get over it.

Conclusion: Getting over the Species Problem

When we use a map we are conscious of its limitations. We know, for example, that because a map shows a particular building as a solid black square, this does not mean

that the color of the building itself is black nor that because the square on the map is solid the building itself has no internal structure. We know that just because a city map does not indicate any trees, this does not mean that none of the city's streets are tree lined. We will go a long way toward solving, or rather dissolving, the species problem when we genuinely come to recognize that our "maps" of evolutionary history have, and will always have, similar limitations, because both trees and maps are based on many of the same representational phenomena. Because the delimitation of species in the present depends upon expectations of the future, and because different systematists may frame such expectations differently, a variety of generalizations of the natural system at "the species level" are possible, and there may not be any absolute criteria available for choosing among them. As we have seen, some of these generalizations may even be incompatible (Figs. 6e, 6f). If Figures 6e and 6f were presented as empirical results by two different systematists it would be natural to assume that one of these trees must be wrong, but that need not be the case: they may simply be two different generalizations of the same chronicle, differing only in how the terminal taxa were initially assembled.

Using individual organisms as terminal taxa in cladistic analysis, rather than aggregates, might seem to be an empirical solution to the problem of future dependence, but this solution evades the question of species delimitation entirely and leaves open an even greater empirical problem, that of recovering a reticulate sequence of events, something that standard cladistic analysis is simply not able to do. It is an assumption of cladistic analysis that derived character states are not distributed across organisms in a partially overlapping manner: cladistics is dependent upon derived character states being either disjunct, completely overlapping, or nested. If two different sets of characters yield incompatible trees, under the assumptions of cladistic analysis one of those trees is wrong. But if the underlying chronicle is reticulate, then both trees may in fact be representing true events in the evolutionary chronicle, each one of them being simply a different selection from the totality of those events (a different generalization). An example from the phylogeny of language will illustrate this point (J. Wills, personal communication). Historical linguists usually consider English to be a part of the Germanic branch of the Indo-European languages. Certain sets of English words, however, are very similar to words in the Algonquian branch of the Amerind languages, very far removed in language evolution from Indo-European. The English word "opossum," for example, is very close to the Algonquian "apasum," English "raccoon" is like Algonquian "arahkun," English "moose" is similar to Natick "moos," and so on. Application of cladistic analysis to world languages using this set of characters would identify English and Algonquian as a clade, while a similar analysis based on another set of characters, kinship terms for example, would recognize English and German as a clade. In fact, English shares derived character states with *both* German and Algonquian, and the concept of clade is imperfectly defined here, just as it is in Figure 6, because the underlying chronicle is partially reticulate. Rigid empiricism will not advance our understanding of evolutionary history very far (de Queiroz and Donoghue, 1990a; O'Hara, 1991a:272).

A more sophisticated awareness of the limits of systematic representation will lead us to recognize that just because a phylogenetic diagram terminates in things called "species" this does not mean that those species have no internal structure (historical structure) of their own, some of which may be recoverable by cladistic analysis. Conversely, just because the terminal "species" of a phylogenetic diagram are drawn on separate branches, this does not necessarily imply that there has been absolutely no gene flow between them, some of which may be detectable by population genetic analysis. If the terminal branches are phylogenetic species in Cracraft's sense (1983), then it is even possible that they

will completely fuse with one another at some point in the future and the distinction between them will become obliterated, contrary to the traditional expectation that species are "permanent varieties." Which of these situations is possible given any particular systematic representation will be clear only from the author's description and annotation of that representation, just as it is only possible to tell from the legend of a map and the conventions of the cartographic community what sorts of objects a given map does and does not represent.

If some particular systematic representation turns out to be inadequate for a certain purpose as studies of the finer details of the evolutionary chronicle proceed, then the way is always open, as it is in cartography, to create new and more finely resolved (less generalized) representations to show the features desired. Indeed we see this issue already being addressed in studies that explore the relationships between "gene trees" and "species trees" (Goodman et al., 1979; Avise et al., 1987; Doyle, 1992). The exercise of a little representational imagination might give us cladistic diagrams of the higher level relationships of a taxon, with insets to show the internal populational or geographic histories of the terminal taxa. I predict that in the coming years such diagrams will appear, and that representations of evolutionary history will become richer and more complex. As the higher level branching sequences in certain taxa become more or less firmly established, we will see more and more elements of the evolutionary chronicle, such as distributions, dispersals, changes in continuous variables, hybridization events, polymorphisms, and so on, mapped onto phylogenetic diagrams. The development of such rich representations may be obstructed somewhat by the standard format of journals, which typically precludes the publication of figures larger than a single page. But eventually it may become as natural to include large folding phylogenetic diagrams in systematic works as it is to include maps in pockets at the back of monographs in geology. The prospects for interactive electronic representations, corresponding to the geographic information systems used by cartographers, are also great; computer programs such as MacClade (Maddison and Maddison, 1992) point the way.

In drawing an analogy in this paper between evolutionary trees and geographic maps I have focused on trees at the "species" level and on prospective narration as a criterion of generalization. But the analogy between trees and maps is not restricted to this case alone (O'Hara, 1992) and it is more than a simple analogy. To the extent that trees and maps are both instances of the general class of representational devices, the similarities between them are identities rather than analogies. In systematics we are particularly concerned with historical representations, and because maps are synchronic representations they are not identical in every respect with trees of history. But because maps as representational devices are comparatively well understood, they can provide us with insights into some of the general problems of representation. These insights can then be adjusted in their details and reapplied to the representation of history, just as elements of the concept of artificial selection can be adjusted and reapplied to the process of natural selection. And just as the original concept of artificial selection, recast as natural selection, can be modified and extended still further to cover the evolution of ideas in individuals (Wright, 1877:115–117) and communities (Toulmin, 1972), so also it may be possible to develop the notion of cartographic generalization, first into a way of understanding "maps" of the history of life, and from there into a general theory of historical representation.

As historical scientists, systematists have become increasingly aware in recent years of the inferential character of their discipline and of the limits placed upon systematics by the task it has set itself: the reconstruction of the evolutionary past. Systematists must now come to realize that their task is not simply one of reconstruction, but of reconstruction and representation, and that historical representation is

no less difficult a matter than historical reconstruction. That is the lesson taught by the species problem.

ACKNOWLEDGMENTS

The writing of this paper was supported by a postdoctoral fellowship from the National Science Foundation (DIR-9103325). For assistance and comments on the manuscript I am grateful to D. A. Baum, J. R. Camerini, N. Carroll, J. Cracraft, A. W. Dickerman, P. L. Gottlieb, W. J. Hahn, G. C. Mayer, W. S. Moore, J. L. Patton, K. de Queiroz, E. Sober, L. S. Weitzman, J. E. Wills, D. Woodward, and the members of the INGRAFX discussion group.

REFERENCES

ATRAN, S. 1990. Cognitive foundations of natural history: Towards an anthropology of science. Cambridge Univ. Press, Cambridge, England.

AVISE, J. C., J. ARNOLD, R. M. BALL, E. BERMINGHAM, T. LAMB, J. E. NEIGEL, C. A. REEB, AND N. C. SAUNDERS. 1987. Intraspecific phylogeography: The mitochondrial DNA bridge between population genetics and systematics. Annu. Rev. Ecol. Syst. 18:489-522.

BARSANTI, G. 1988. Le immagini della natura: Scale, mappe, alberi 1700-1800. Nuncius 3:55-125.

BAUM, D. 1992. Phylogenetic species concepts. Trends Ecol. Evol. 7:1-2.

BERTIN, J. 1983. The semiology of graphics: Diagrams, networks, maps. [Translated by W. J. Berg.] Univ. Wisconsin Press, Madison.

BUTTENFIELD, B. P., AND R. B. MCMASTER (eds.). 1991. Map generalization: Making rules for knowledge representation. Longman Scientific & Technical, Essex, England.

CARROLL, L. 1893. Sylvie and Bruno concluded. Macmillan, London.

CRACRAFT, J. 1983. Species concepts and speciation analysis. Curr. Ornithol. 1:159-187.

DANTO, A. 1968. The analytical philosophy of history. Cambridge Univ. Press, Cambridge, England.

DANTO, A. 1985. Narration and knowledge. Columbia Univ. Press, New York.

DARWIN, C. 1859. On the origin of species. John Murray, London.

DE QUEIROZ, K. 1988. Systematics and the Darwinian revolution. Philos. Sci. 55:238-259.

DE QUEIROZ, K., AND M.J. DONOGHUE. 1988. Phylogenetic systematics and the species problem. Cladistics 4:317-338.

DE QUEIROZ, K., AND M. J. DONOGHUE. 1990a. Phylogenetic systematics or Nelson's version of cladistics? Cladistics 6:61-75.

DE QUEIROZ, K., AND M. J. DONOGHUE. 1990b. Phylogenetic systematics and species revisited. Cladistics 6:83-90.

DEWEY, J. 1910. The influence of Darwinism on philosophy, and other essays in contemporary thought. Henry Holt and Co., New York.

DOBZHANSKY, T. 1950. Mendelian populations and their evolution. Am. Nat. 84:401-418.

DOYLE, J. J. 1992. Gene trees and species trees: Molecular systematics as one-character taxonomy. Syst. Bot. 17:144-163.

EHRLICH, P., AND P. RAVEN. 1969. Differentiation of populations. Science 165:1228-1232.

ERESHEFSKY, M. (ed.). 1991. The units of evolution: Essays on the nature of species. MIT Press, Cambridge, Massachusetts.

GHISELIN, M. 1987. Species concepts, individuality, and objectivity. Biol. Philos. 2:127-143.

GOODMAN, M., J. CZELUSNIAK, G. W. MOORE, A. W. ROMERO-HERRERA, AND G. MATSUDA. 1979. Fitting the gene lineage to its species lineage, a parsimony strategy illustrated by cladograms constructed from globin sequences. Syst. Zool. 28:132-163.

GRIFFITHS, G. C. D. 1974. On the foundations of biological systematics. Acta Biotheor. 23:85-131.

HENNIG, W. 1966. Phylogenetic systematics. [Translated by D. D. Davis and R. Zangerl.] Univ. Illinois Press, Urbana.

MACLEAY, W. S. 1819-1821. Horae entomologicae: Or essays on the annulose animals. S. Bagster, London.

MADDISON, W. P., AND D. R. MADDISON. 1992. MacClade, version 3.0. Sinauer, Sunderland, Massachusetts.

MAYR, E. 1940. Speciation phenomena in birds. Am. Nat. 74:249-278.

MAYR, E. 1963. Animal species and evolution. Harvard Univ. Press, Cambridge, Massachusetts.

MAYR, E. 1970. Populations, species, and evolution. Harvard Univ. Press, Cambridge, Massachusetts.

MAYR, E. 1982. The growth of biological thought. Harvard Univ. Press, Cambridge, Massachusetts.

MISHLER, B. D., AND M. J. DONOGHUE. 1982. Species concepts: A case for pluralism. Syst. Zool. 31:491-503.

NELSON, G. 1989. Cladistics and evolutionary models. Cladistics 5:275-289.

O'HARA, R. J. 1987. Strickland and Wallace, and the systematic argument for evolution. Am. Zool. 27: 107A.

O'HARA, R. J. 1988a. Diagrammatic classifications of birds, 1819-1901: Views of the natural system in 19th-century British ornithology. Pages 2746-2759 *in* Acta XIX Congressus Internationalis Ornithologici (H. Ouellet, ed.). National Museum of Natural Science, Ottawa, Ontario, Canada.

O'HARA, R. J. 1988b. Homage to Clio, or, toward an historical philosophy for evolutionary biology. Syst. Zool. 37:142-155.

O'HARA, R. J. 1991a. Representations of the natural system in the nineteenth century. Biol. Philos. 6:255-274.

O'HARA, R. J. 1991b. Review of *Phylogeny and Classification of Birds: A Study in Molecular Evolution*, by C. G. Sibley and J. E. Ahlquist. Auk 108:990-994.

O'HARA, R. J. 1992. Telling the tree: Narrative representation and the study of evolutionary history. Biol. Philos. 7:135-160.

PATERSON, H. 1985. The recognition concept of species. Pages 21-29 *in* Species and speciation (E. Vrba,

ed.). Transvaal Mus. Monogr. 4, Pretoria, South Africa.

ROBINSON, A. H., AND B. B. PETCHENIK. 1976. The nature of maps. Univ. Chicago Press, Chicago.

ROBINSON, A. H., R. D. SALE, J. L. MORRISON, AND P. C. MUEHRCKE. 1984. Elements of cartography, 5th edition. Wiley, New York.

ROUSE, J. 1990. The narrative reconstruction of science. Inquiry 33:179–196.

SIBLEY, C. G., AND J. E. AHLQUIST. 1990. Phylogeny and classification of birds: A study of molecular evolution. Yale Univ. Press, New Haven, Connecticut.

SOBER, E. 1984. Sets, species, and evolution: Comments on Philip Kitcher's "Species." Philos. Sci. 51: 334–341.

SOBER, E. 1993. Philosophy of biology. Westview Press, Boulder, Colorado.

STEVENS, P. F. 1984. Metaphors and typology in the development of botanical systematics 1690–1960, or the art of putting new wine in old bottles. Taxon 33:169–211.

STRICKLAND, H. E. 1841. On the true method of discovering the natural system in zoology and botany. Ann. Mag. Nat. Hist. 6:184–194, pl.

TÖPFER, F., AND W. PILLEWIZER. 1966. The principles of selection. Cartogr. J. 3:10–16.

TOULMIN, S. 1953. The philosophy of science: An introduction. Hutchinson Univ. Library, London.

TOULMIN, S. 1972. Human understanding. Clarendon Press, Oxford, England.

VAN VALEN, L. 1976. Ecological species, multispecies, and oaks. Taxon 25:233–239.

WALLACE, A. R. 1856. Attempts at a natural arrangement of birds. Ann. Mag. Nat. Hist. 2nd Ser. 18: 193–216.

WHEELER, Q. D., AND K. C. NIXON. 1990. Another way of looking at the species problem: A reply to de Queiroz and Donoghue. Cladistics 6:77–81.

WILEY, E. O. 1978. The evolutionary species concept reconsidered. Syst. Zool. 27:17–26.

WILEY, E. O. 1981. Phylogenetics: The theory and practice of phylogenetic systematics. Wiley, New York.

WRIGHT, C. 1877. Philosophical discussions. Henry Holt and Co., New York.

Received 15 April 1992; accepted 31 December 1992